HEARTWORKS, INC.

3,500 S.F. BUILDING ADDITION

MAY 2017 **FINAL PLANS**

RECEIVED
MAY 11 2017
PLANNING/ZONING

Upon finding that the final plans complied with all requirements of the *Williston Development Bylaw* and all conditions imposed on the approval of Discretionary Permit 17-14, the Williston Development Review Board/Administrator approved the final plans for the (name Subdivision) on the 19 day of (~~month~~), 20 17.

Ken Bellman MAY, Z.A.
~~DRB Chair~~

OWNER / APPLICANT:

BRUNSWICK, LLC
c/o POMERLEAU REAL ESTATE
P.O. BOX 6
BURLINGTON, VT 05402

LIST OF DRAWINGS

TITLE	SHEET NO.
TITLE SHEET	C-0.1
ORTHOPHOTO	C-1.0
EXISTING CONDITIONS	C-1.1
PROPOSED SITE PLAN	C-2.1
EROSION CONTROL PLAN	C-2.2
LANDSCAPING PLAN	L-1.1
STORMWATER DETAILS	C-4.0
WATER & SEWER DETAILS	C-4.1

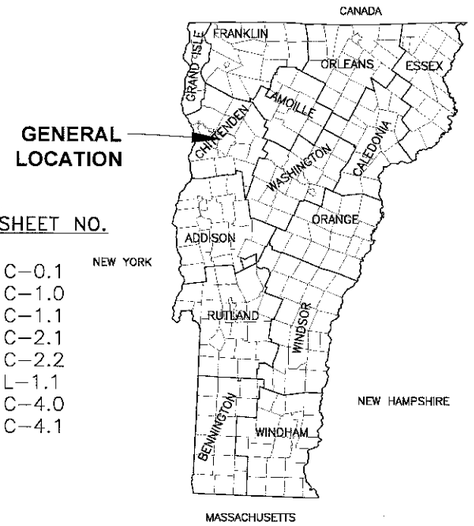

GENERAL LOCATION

GENERAL LOCATION MAP
NOT TO SCALE

DuBois & King inc.
engineering planning management development

SBA
SMITH BUCKLEY ARCHITECTS

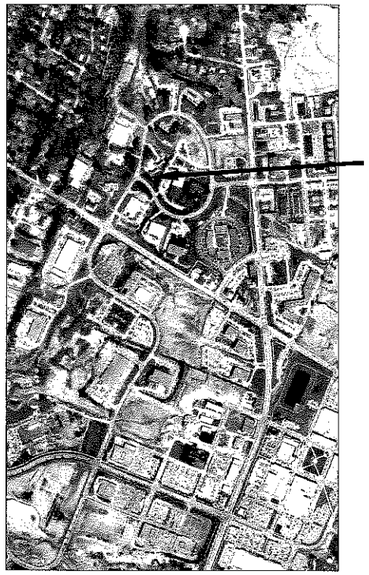

PROJECT LOCATION

PROJECT LOCATION MAP
NOT TO SCALE

DP 17-14

DuBois & King inc.
ENGINEERING • PLANNING • MANAGEMENT • DEVELOPMENT
6 GREEN TREE DRIVE
SO. BURLINGTON, VT 05403
TEL: (802) 878-7661
FAX: (802) 783-7101
www.dubois-king.com
RANDOLPH, VT
SPRINGFIELD, VT
BEDFORD, NH
LACONIA, NH

© Copyright 2017 Dubois & King Inc.

PROFESSIONAL SEAL

NO.	DATE	DESCRIPTION	BY	CK'D

HEARTWORKS, INC.
WILLISTON, VT
LOT 17
644 BLAIR PARK RD.

HEARTWORKS, INC.
2017
IMPROVEMENTS

SHEET TITLE
TITLE SHEET

DRAWN BY	DATE
JWP	05/02/17
CHECKED BY	D&K PROJECT #
RCL	419491P2
PROJ. ENG.	D&K ARCHIVE #
MAM	

SHEET NUMBER
C-0.1

I:\419491P2_Pomerleau_Heartworks\dwg\419491P2_TT.dwg 5/10/2017 12:04 PM

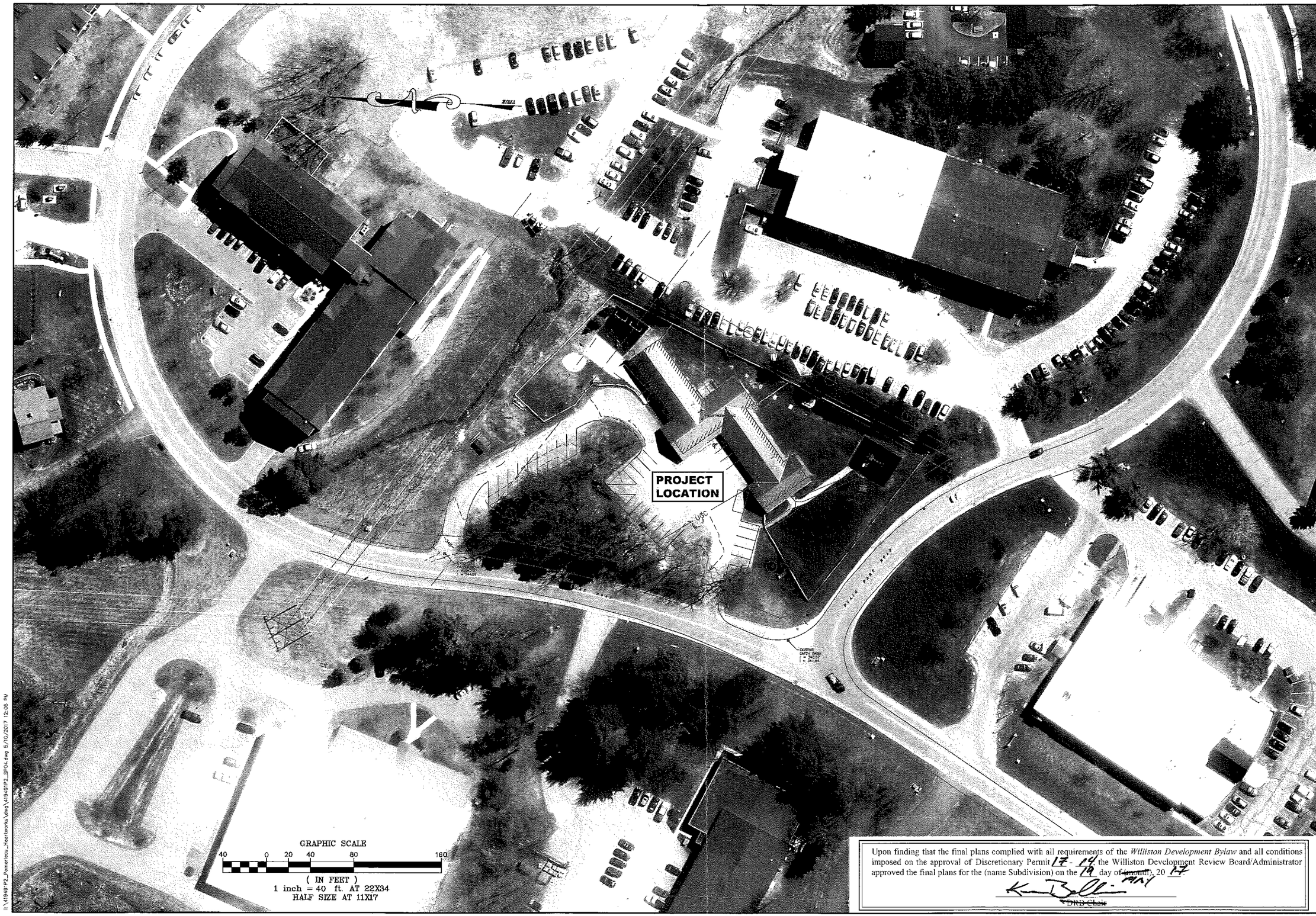

Upon finding that the final plans complied with all requirements of the *Williston Development Bylaw* and all conditions imposed on the approval of Discretionary Permit 17-14, the Williston Development Review Board/Administrator approved the final plans for the (name Subdivision) on the 19 day of ~~(month)~~ MAY, 20 17

DRB Chair

DuBois & King inc.
ENGINEERING • PLANNING • MANAGEMENT • DEVELOPMENT
6 GREEN TREE DRIVE
SO. BURLINGTON, VT 05403
TEL: (802) 878-7661
FAX: (802) 783-7101
www.dubois-king.com
RANDOLPH, VT
SPRINGFIELD, VT
BEDFORD, NH
LACONIA, NH
© Copyright 2017 Dubois & King Inc.

PROFESSIONAL SEAL

NO.	DATE	DESCRIPTION	BY	CK'D

HEARTWORKS, INC.
WILLISTON, VT

LOT 17
644 BLAIR PARK RD.

HEARTWORKS, INC.
2017
IMPROVEMENTS

SHEET TITLE

ORTHOPHOTO

DRAWN BY	DATE
JWP	05/02/17
CHECKED BY	D&K PROJECT #
RCL	419491P2
PROJ. ENG.	D&K ARCHIVE #
MAM	

SHEET NUMBER

C-1.0

I:\419491P2_Domenico_Heartworks\dwg\419491P2_SP04.dwg 5/10/2017 12:06 PM

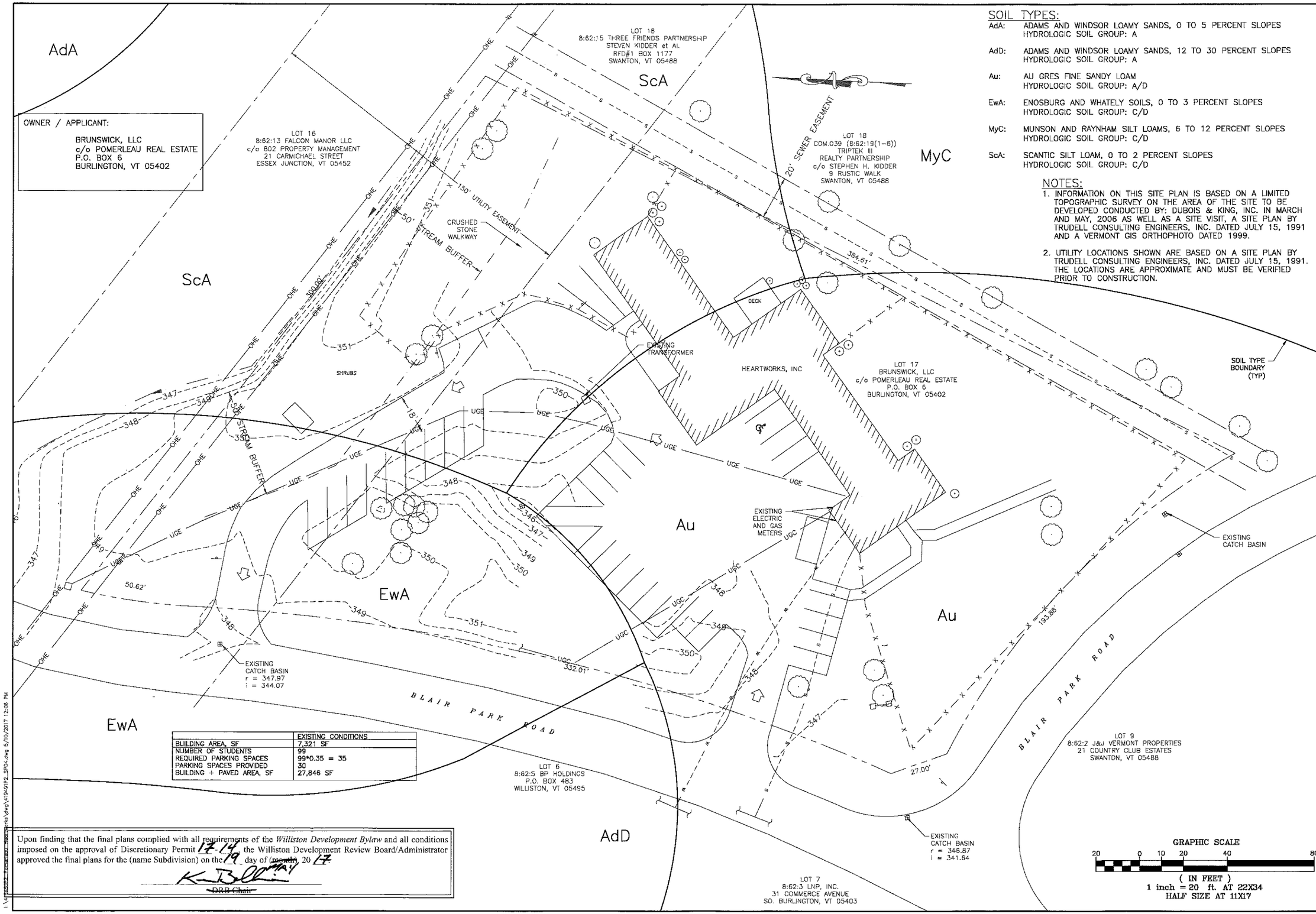

SOIL TYPES:

- AdA: ADAMS AND WINDSOR LOAMY SANDS, 0 TO 5 PERCENT SLOPES
  HYDROLOGIC SOIL GROUP: A
- AdD: ADAMS AND WINDSOR LOAMY SANDS, 12 TO 30 PERCENT SLOPES
  HYDROLOGIC SOIL GROUP: A
- Au: AU GRES FINE SANDY LOAM
  HYDROLOGIC SOIL GROUP: A/D
- EwA: ENOSBURG AND WHATELY SOILS, 0 TO 3 PERCENT SLOPES
  HYDROLOGIC SOIL GROUP: C/D
- MyC: MUNSON AND RAYNHAM SILT LOAMS, 6 TO 12 PERCENT SLOPES
  HYDROLOGIC SOIL GROUP: C/D
- ScA: SCANTIC SILT LOAM, 0 TO 2 PERCENT SLOPES
  HYDROLOGIC SOIL GROUP: C/D

NOTES:

1. INFORMATION ON THIS SITE PLAN IS BASED ON A LIMITED TOPOGRAPHIC SURVEY ON THE AREA OF THE SITE TO BE DEVELOPED CONDUCTED BY: DUBOIS & KING, INC. IN MARCH AND MAY, 2006 AS WELL AS A SITE VISIT, A SITE PLAN BY TRUDELL CONSULTING ENGINEERS, INC. DATED JULY 15, 1991 AND A VERMONT GIS ORTHOPHOTO DATED 1999.
2. UTILITY LOCATIONS SHOWN ARE BASED ON A SITE PLAN BY TRUDELL CONSULTING ENGINEERS, INC. DATED JULY 15, 1991. THE LOCATIONS ARE APPROXIMATE AND MUST BE VERIFIED PRIOR TO CONSTRUCTION.

	EXISTING CONDITIONS
BUILDING AREA, SF	7,321 SF
NUMBER OF STUDENTS	99
REQUIRED PARKING SPACES	99*0.35 = 35
PARKING SPACES PROVIDED	30
BUILDING + PAVED AREA, SF	27,846 SF

Upon finding that the final plans complied with all requirements of the *Williston Development Bylaw* and all conditions imposed on the approval of Discretionary Permit 17-14 the Williston Development Review Board/Administrator approved the final plans for the (name Subdivision) on the 19 day of ~~(month)~~ MAY, 20 17

DRB Chair

DuBois & King inc.
ENGINEERING • PLANNING • MANAGEMENT • DEVELOPMENT
6 GREEN TREE DRIVE
SO. BURLINGTON, VT 05403
TEL: (802) 878-7661
FAX: (802) 783-7101
www.dubois-king.com
RANDOLPH, VT
SPRINGFIELD, VT
BEDFORD, NH
LACONIA, NH

© Copyright 2017 Dubois & King Inc.

PROFESSIONAL SEAL

NO.	DATE	DESCRIPTION	BY	CK'D

HEARTWORKS, INC.
WILLISTON, VT

LOT 17
644 BLAIR PARK RD.

HEARTWORKS, INC.
2017
IMPROVEMENTS

SHEET TITLE

EXISTING CONDITIONS

DRAWN BY	DATE
JWP	05/02/17
CHECKED BY	D&K PROJECT #
RCL	419491P2
PROJ. ENG.	D&K ARCHIVE #
MAM	

SHEET NUMBER

C-1.1

I:\419491P2_Pomerleau_Williston\dwg\419491P2_SP04.dwg 5/10/2017 12:06 PM

Upon finding that the final plans complied with all requirements of the *Williston Development Bylaw* and all conditions imposed on the approval of Discretionary Permit 17-18 the Williston Development Review Board/Administrator approved the final plans for the (name Subdivision) on the 19 day of ~~(month)~~ May, 20 17.

~~DRB Chair~~

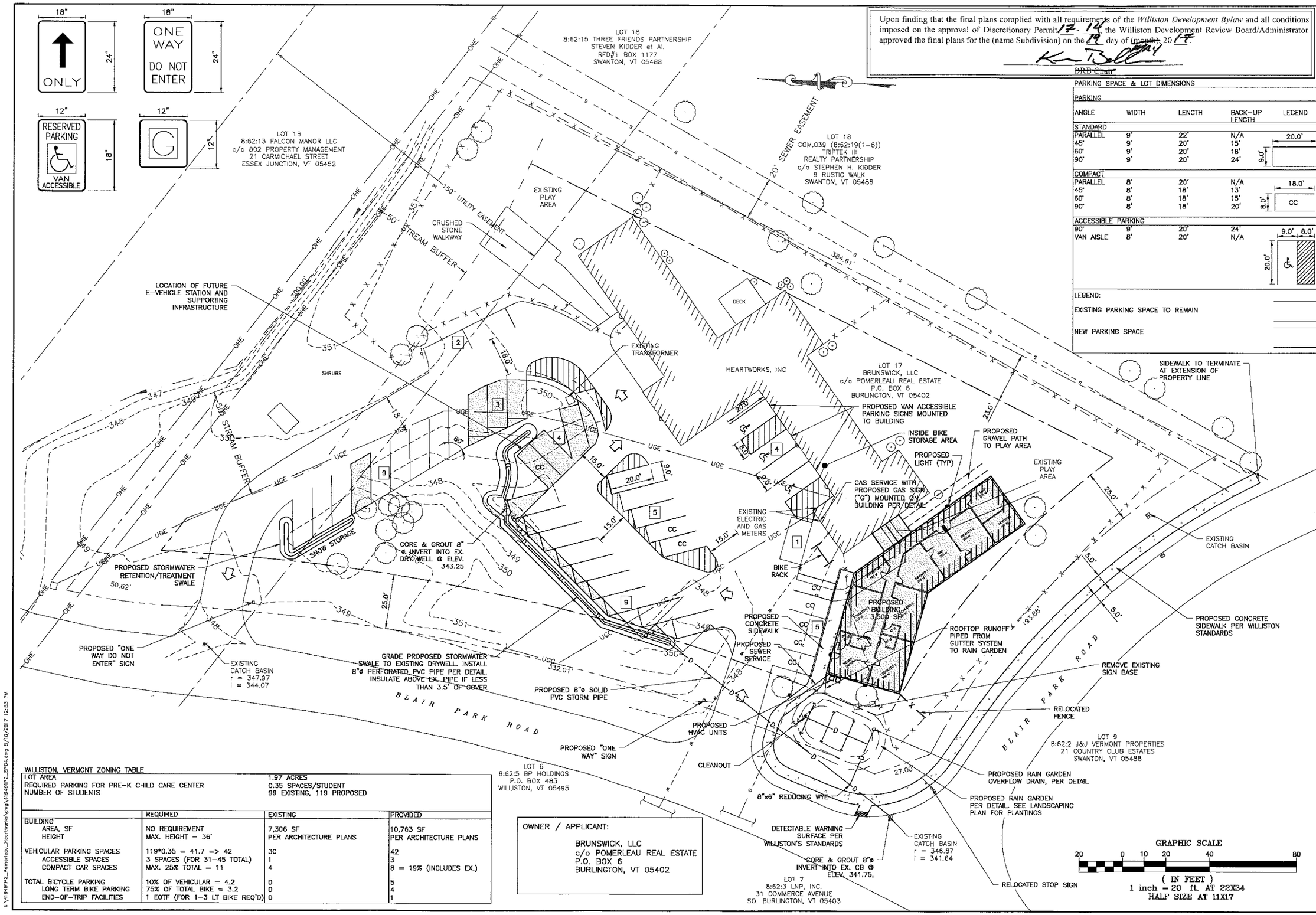

PARKING SPACE & LOT DIMENSIONS

PARKING				
ANGLE	WIDTH	LENGTH	BACK-UP LENGTH	LEGEND
STANDARD				
PARALLEL	9'	22'	N/A	20.0'
45°	9'	20'	15'	
60°	9'	20'	18'	9.0'
90°	9'	20'	24'	
COMPACT				
PARALLEL	8'	20'	N/A	18.0'
45°	8'	18'	13'	
60°	8'	18'	15'	8.0' CC
90°	8'	18'	20'	
ACCESSIBLE PARKING				
90°	9'	20'	24'	9.0' 8.0'
VAN AISLE	8'	20'	N/A	20.0'

LEGEND:

EXISTING PARKING SPACE TO REMAIN

NEW PARKING SPACE

WILLISTON, VERMONT ZONING TABLE

LOT AREA	1.97 ACRES
REQUIRED PARKING FOR PRE-K CHILD CARE CENTER	0.35 SPACES/STUDENT
NUMBER OF STUDENTS	99 EXISTING, 119 PROPOSED

	REQUIRED	EXISTING	PROVIDED
BUILDING			
AREA, SF	NO REQUIREMENT	7,306 SF	10,763 SF
HEIGHT	MAX. HEIGHT = 36'	PER ARCHITECTURE PLANS	PER ARCHITECTURE PLANS
VEHICULAR PARKING SPACES	119*0.35 = 41.7 => 42	30	42
ACCESSIBLE SPACES	3 SPACES (FOR 31-45 TOTAL)	1	3
COMPACT CAR SPACES	MAX. 25% TOTAL = 11	4	8 = 19% (INCLUDES EX.)
TOTAL BICYCLE PARKING	10% OF VEHICULAR = 4.2	0	5
LONG TERM BIKE PARKING	75% OF TOTAL BIKE = 3.2	0	4
END-OF-TRIP FACILITIES	1 EOTF (FOR 1-3 LT BIKE REQ'D)	0	1

OWNER / APPLICANT:

BRUNSWICK, LLC
c/o POMERLEAU REAL ESTATE
P.O. BOX 6
BURLINGTON, VT 05402

DuBois & King inc.
ENGINEERING • PLANNING • MANAGEMENT • DEVELOPMENT
6 GREEN TREE DRIVE
SO. BURLINGTON, VT 05403
TEL: (802) 878-7661
FAX: (802) 783-7101
www.dubois-king.com
RANDOLPH, VT
SPRINGFIELD, VT
BEDFORD, NH
LACONIA, NH

© Copyright 2017 Dubois & King Inc.

PROFESSIONAL SEAL

NO.	DATE	DESCRIPTION	BY	CK'D

HEARTWORKS, INC.
WILLISTON, VT

LOT 17
644 BLAIR PARK RD.

HEARTWORKS, INC.
2017
IMPROVEMENTS

SHEET TITLE

PROPOSED SITE PLAN

DRAWN BY	DATE
JWP	05/02/17
CHECKED BY	D&K PROJECT #
RCL	419491P2
PROJ. ENG	D&K ARCHIVE #
MAM	

SHEET NUMBER

C-2.1

I:\419491P2_Pomerleau_Heartworks\dwg\419491P2_SP04.dwg 5/10/2017 12:53 PM

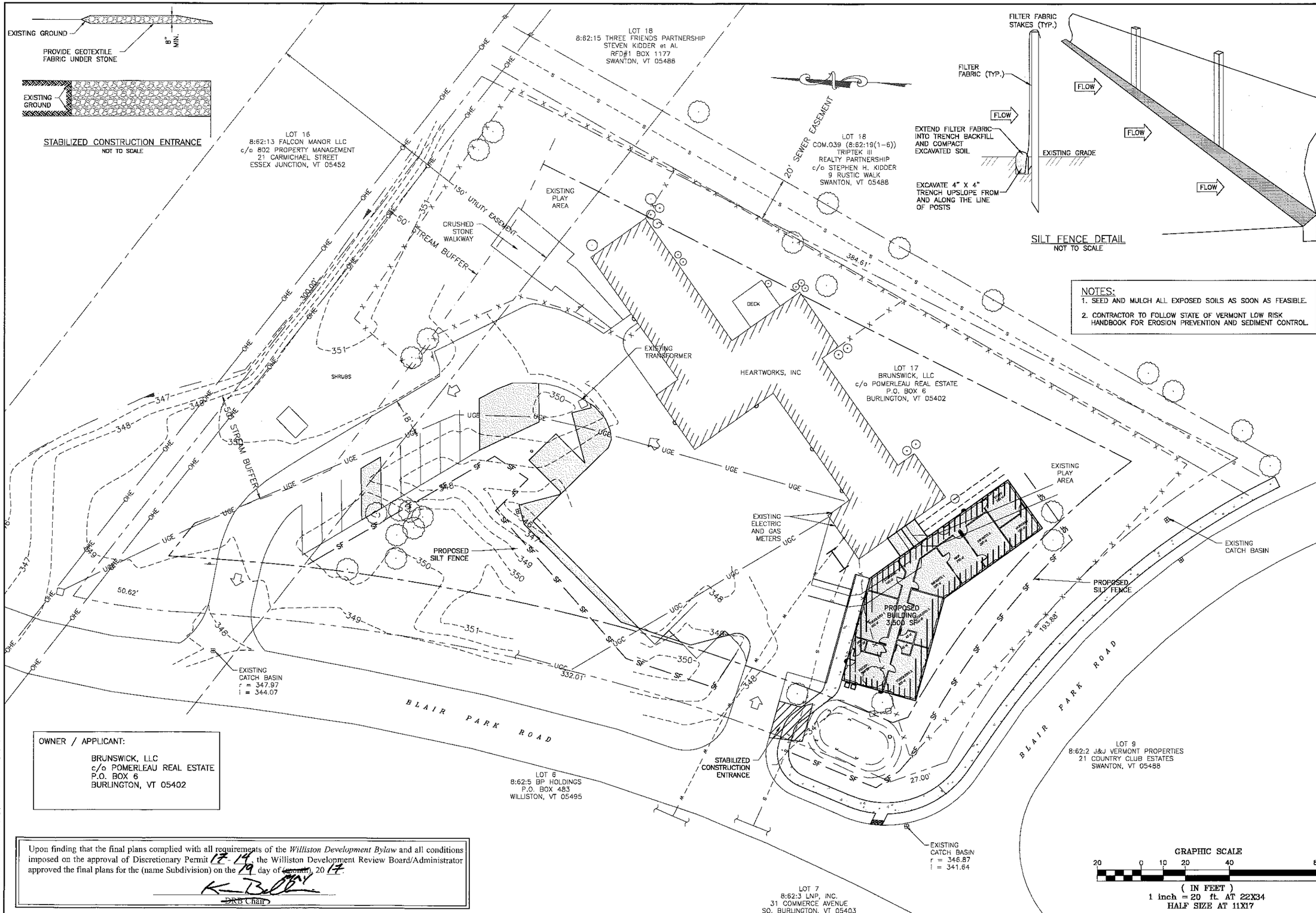

NOTES:
1. SEED AND MULCH ALL EXPOSED SOILS AS SOON AS FEASIBLE.
2. CONTRACTOR TO FOLLOW STATE OF VERMONT LOW RISK HANDBOOK FOR EROSION PREVENTION AND SEDIMENT CONTROL.

OWNER / APPLICANT:
BRUNSWICK, LLC
c/o POMERLEAU REAL ESTATE
P.O. BOX 6
BURLINGTON, VT 05402

Upon finding that the final plans complied with all requirements of the *Williston Development Bylaw* and all conditions imposed on the approval of Discretionary Permit 17-14 the Williston Development Review Board/Administrator approved the final plans for the (name Subdivision) on the 19 day of ~~(month)~~, 20 17.

DRB Chair

DuBois & King inc.
ENGINEERING • PLANNING • MANAGEMENT • DEVELOPMENT
6 GREEN TREE DRIVE
SO. BURLINGTON, VT 05403
TEL: (802) 878-7661
FAX: (802) 863-7101
www.dubois-king.com
RANDOLPH, VT
SPRINGFIELD, VT
BEDFORD, NH
LACONIA, NH

© Copyright 2017 Dubois & King Inc.

PROFESSIONAL SEAL

NO.	DATE	DESCRIPTION	BY	CK'D

HEARTWORKS, INC.
WILLISTON, VT

LOT 17
644 BLAIR PARK RD.

HEARTWORKS, INC.
2017
IMPROVEMENTS

SHEET TITLE

EROSION CONTROL PLAN

DRAWN BY	DATE
JWP	05/02/17
CHECKED BY	D&K PROJECT #
RCL	419491P2
PROJ. ENG.	D&K ARCHIVE #
MAM	

SHEET NUMBER

C-2.2

I:\419491P2_Pomerleau_Heartworks\dwg\419491P2_SP04.dwg 5/10/2017 12:06 PM

Upon finding that the final plans complied with all requirements of the *Williston Development Bylaw* and all conditions imposed on the approval of Discretionary Permit 17-14 the Williston Development Review Board/Administrator approved the final plans for the (name Subdivision) on the 19 day of (month) 20 17.

DRB Chair

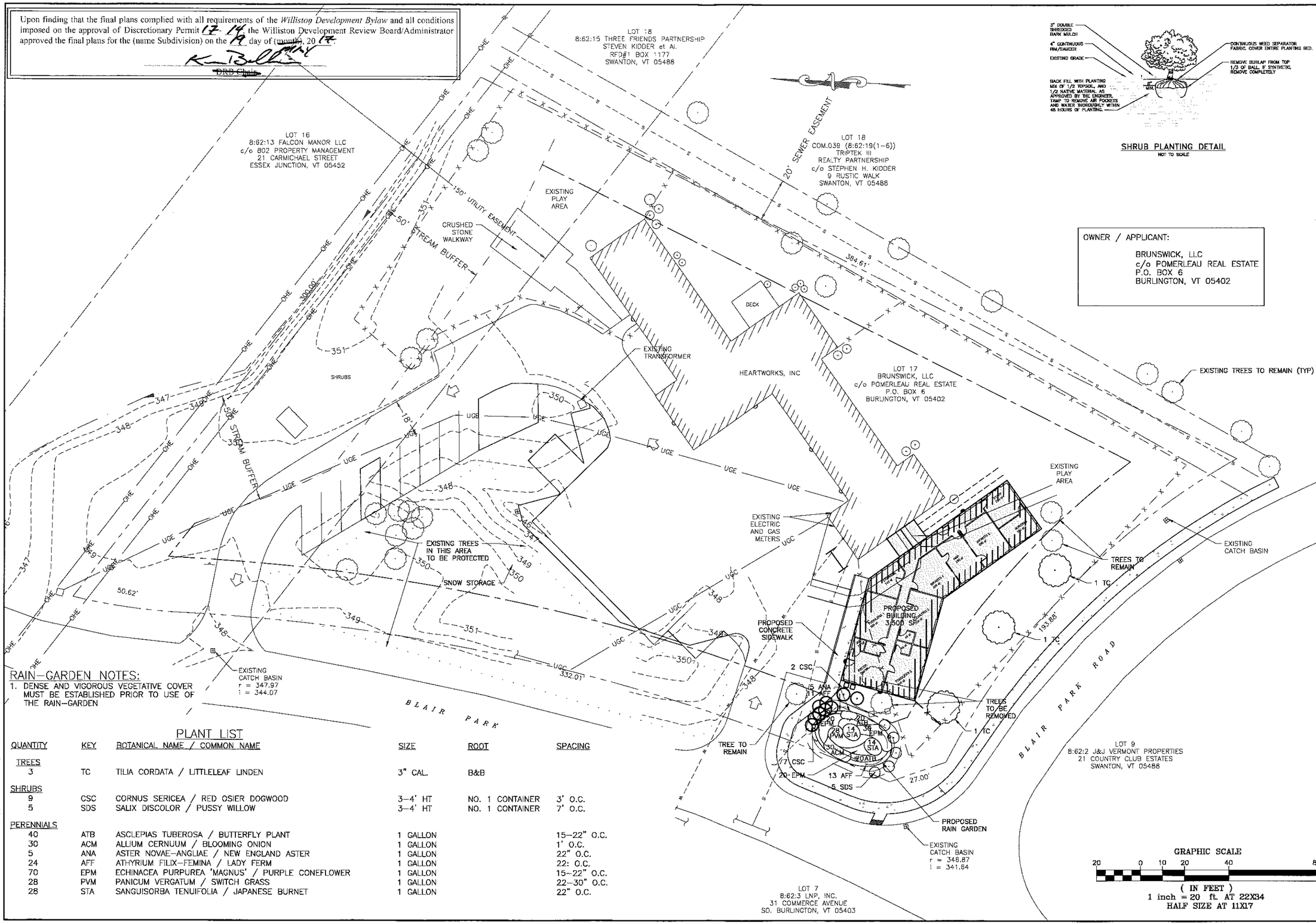

SHRUB PLANTING DETAIL
NOT TO SCALE

OWNER / APPLICANT:

BRUNSWICK, LLC
c/o POMERLEAU REAL ESTATE
P.O. BOX 6
BURLINGTON, VT 05402

RAIN-GARDEN NOTES:

1. DENSE AND VIGOROUS VEGETATIVE COVER MUST BE ESTABLISHED PRIOR TO USE OF THE RAIN-GARDEN

PLANT LIST

QUANTITY	KEY	BOTANICAL NAME / COMMON NAME	SIZE	ROOT	SPACING
TREES					
3	TC	TILIA CORDATA / LITTLELEAF LINDEN	3" CAL.	B&B	
SHRUBS					
9	CSC	CORNUS SERICEA / RED OSIER DOGWOOD	3-4' HT	NO. 1 CONTAINER	3' O.C.
5	SDS	SALIX DISCOLOR / PUSSY WILLOW	3-4' HT	NO. 1 CONTAINER	7' O.C.
PERENNIALS					
40	ATB	ASCLEPIAS TUBEROSA / BUTTERFLY PLANT	1 GALLON		15-22" O.C.
30	ACM	ALLIUM CERNUUM / BLOOMING ONION	1 GALLON		1' O.C.
5	ANA	ASTER NOVAE-ANGLIAE / NEW ENGLAND ASTER	1 GALLON		22" O.C.
24	AFF	ATHYRIUM FILIX-FEMINA / LADY FERM	1 GALLON		22: O.C.
70	EPM	ECHINACEA PURPUREA 'MAGNUS' / PURPLE CONEFLOWER	1 GALLON		15-22" O.C.
28	PVM	PANICUM VERGATUM / SWITCH GRASS	1 GALLON		22-30" O.C.
28	STA	SANGUISORBA TENUIFOLIA / JAPANESE BURNET	1 GALLON		22" O.C.

DuBois & King inc.
ENGINEERING • PLANNING • MANAGEMENT • DEVELOPMENT
6 GREEN TREE DRIVE
SO. BURLINGTON, VT 05403
TEL: (802) 878-7661
FAX: (802) 783-7101
www.dubois-king.com
RANDOLPH, VT
SPRINGFIELD, VT
BEDFORD, NH
LACONIA, NH

© Copyright 2017 Dubois & King Inc.

PROFESSIONAL SEAL

NO.	DATE	DESCRIPTION	BY	CK'D

HEARTWORKS, INC.
WILLISTON, VT

LOT 17
644 BLAIR PARK RD.

HEARTWORKS, INC.
2017
IMPROVEMENTS

SHEET TITLE

LANDSCAPING PLAN

DRAWN BY: JWP	DATE: 05/02/17
CHECKED BY: RCL	D&K PROJECT #: 419491P2
PROJ. ENG.: MAM	D&K ARCHIVE #:

SHEET NUMBER

L-1.1

:\419491P2_Pomerleau_Heartworks\dwg\419491P2_SP04.dwg 5/10/2017 12:06 PM

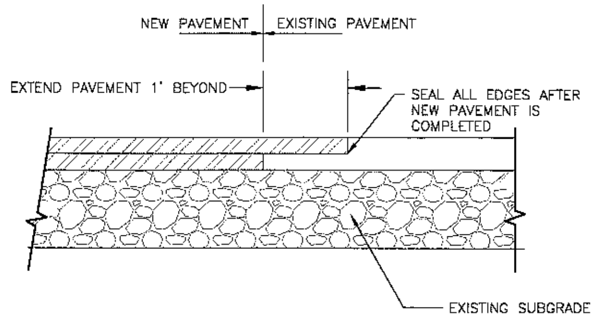

NEW PAVEMENT TO EXISTING PAVEMENT
NOT TO SCALE

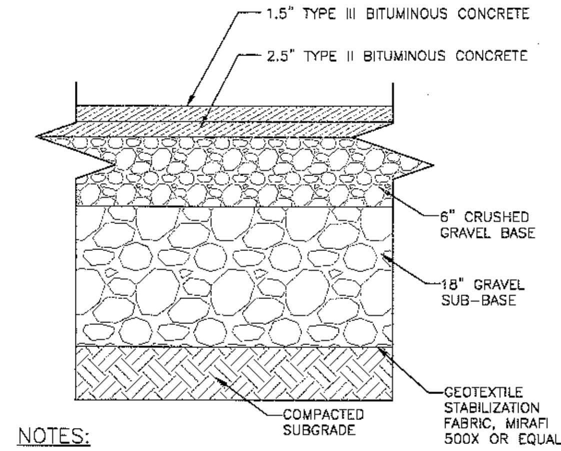

NOTES:

1. TYPE II AND TYPE III BITUMINOUS CONCRETE MIXTURES SHALL COMPLY WITH VAOT STANDARD SPECIFICATIONS FOR CONSTRUCTION (SECTION 404.06 AND 406.01–406.04).
2. BASE AND SUB-BASE TO CONFORM TO VAOT STANDARD SPECIFICATIONS FOR MATERIALS (704.04 AND 704.05) AND PLACEMENTS (301.03–05).

LIGHT DUTY BITUMINOUS PAVEMENT DETAIL
NOT TO SCALE

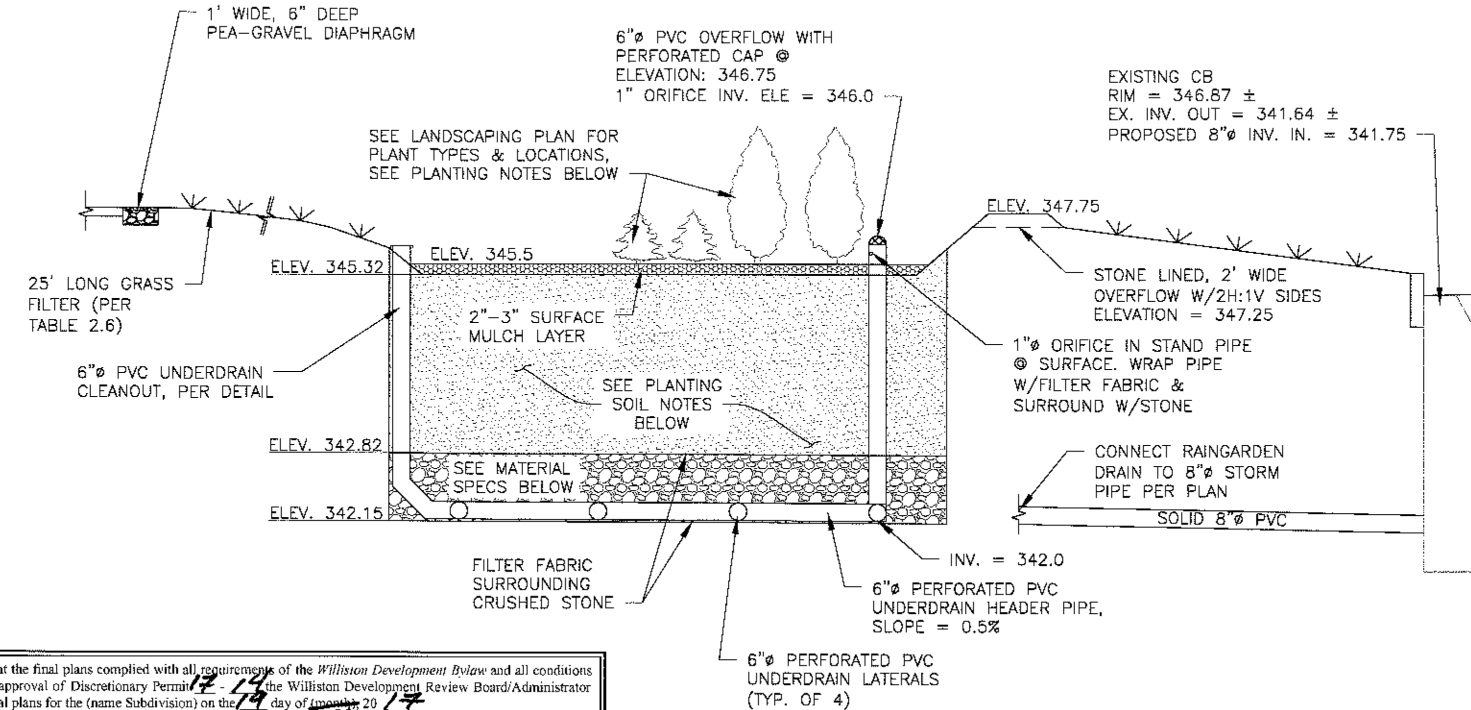

RAIN-GARDEN DETAIL
NOT TO SCALE

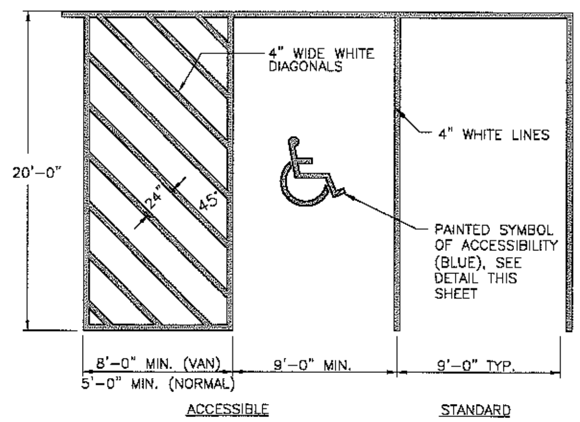

PARKING PAVEMENT MARKINGS
NOT TO SCALE

Upon finding that the final plans complied with all requirements of the *Williston Development Bylaw* and all conditions imposed on the approval of Discretionary Permit 17 - 14 the Williston Development Review Board/Administrator approved the final plans for the (name Subdivision) on the 17 day of (month) May 20 17

K. Bell
DRB Chair

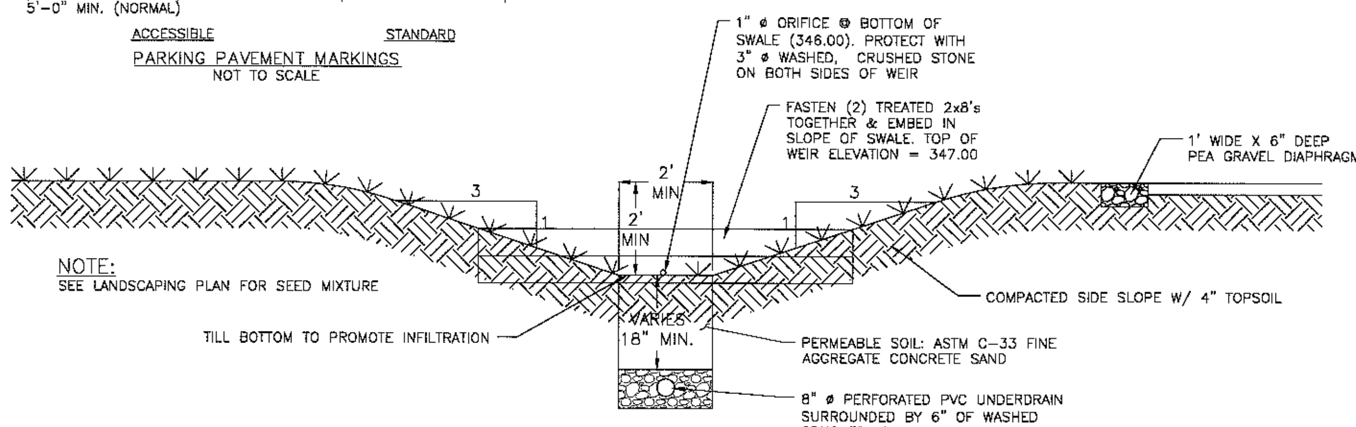

DRY SWALE
NOT TO SCALE

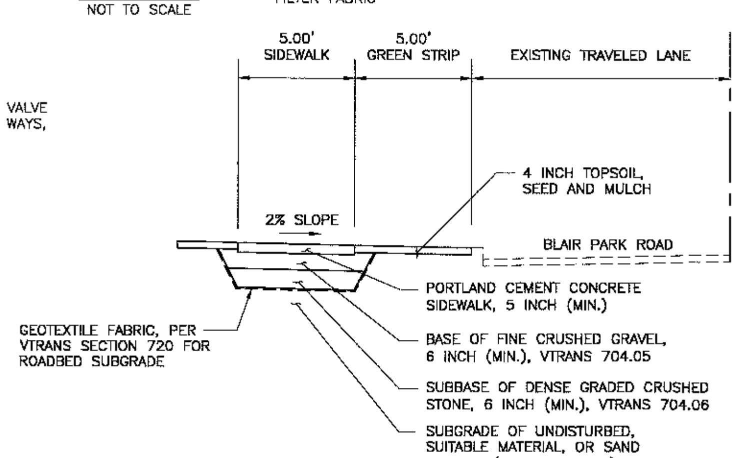

SIDEWALK NOTES:

1. PER THE TOWN OF WILLISTON PUBLIC WORKS DEPARTMENT DRAWINGS E-14, AND E-5.
2. THE WILLISTON DPW SHALL BE NOTIFIED IN ADVANCE TO INSPECT THE CONSTRUCTION OF THE SIDEWALK
3. MIN. COMPRESSION STRENGTH SHALL BE VTRANS CLASS B, 3500 PSI.
4. ALL CONCRETE SHALL BE IN ACCORDANCE WITH VTRANS SECTION 501.
5. SUBBASE MATERIALS SHALL MEET VTRANS SECTION 703 AND 704/

TYPICAL SIDEWALK SECTION
NOT TO SCALE

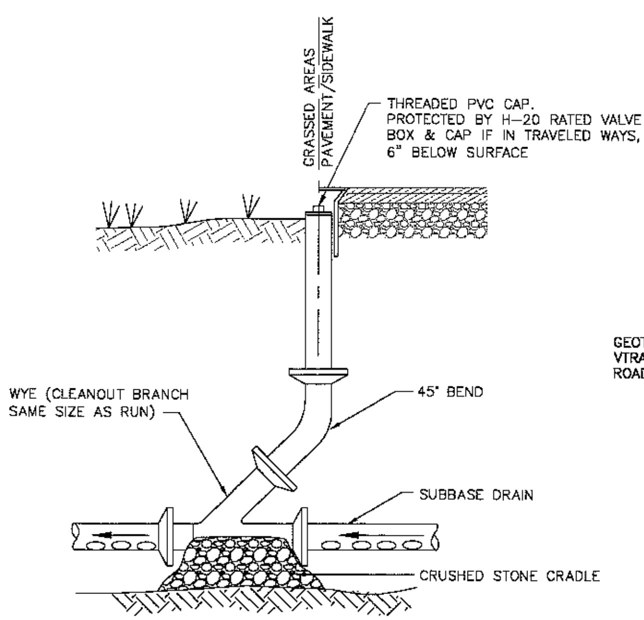

UNDERDRAIN CLEANOUT DETAIL
NOT TO SCALE

RAIN-GARDEN NOTES:

1. THE BIORETENTION FACILITY MAY NOT BE CONSTRUCTED UNTIL ALL CONTRIBUTING DRAINAGE AREAS HAVE BEEN STABILIZED.

PLANTING SOIL:

1. THE SOIL SHALL BE A UNIFORM MIX, FREE OF STONES, STUMPS, ROOTS OR OTHER SIMILAR OBJECTS LARGER THAN TWO INCHES. NO OTHER MATERIALS OR SUBSTANCES SHOULD BE MIXED OR DUMPED WITHIN THE BIORETENTION AREA THAT MAY BE HARMFUL TO PLANT GROWTH, OR PROVE A HINDRANCE TO THE PLANTING OR MAINTENANCE OPERATIONS. THE PLANTING SOIL SHOULD BE FREE OF NOXIOUS WEEDS.
2. THE PLANTING SOIL SHOULD BE TESTED AND SHOULD MEET THE FOLLOWING CRITERIA:

pH RANGE	5.2–7.0
ORGANIC MATTER	1.5–4%
MAGNESIUM	35 lb/ac
PHOSPHORUS P_2O_5	75 lb/ac
POTASSIUM K_2O	85 lb/ac
SOLUBLE SALTS	N.T.E. 500 ppm

3. ALL BIORETENTION AREAS SHALL HAVE A MINIMUM OF ONE TEST. EACH TEST SHOULD CONSIST OF BOTH THE STANDARD SOIL TEST FOR pH, PHOSPHORUS, AND POTASSIUM AND ADDITIONAL TESTS OF ORGANIC MATTER, AND SOLUBLE SALTS. A TEXTURAL ANALYSIS IS REQUIRED FROM THE SITE'S STOCKPILED TOPSOIL. IF TOPSOIL IS IMPORTED, THEN A TEXTURE ANALYSIS SHOULD BE PERFORMED FOR EACH LOCATION WHERE THE TOPSOIL WAS EXCAVATED.
4. SINCE DIFFERENT LABS CALIBRATE THEIR TESTING EQUIPMENT DIFFERENTLY, ALL TESTING RESULTS SHALL COME FROM THE SAME TESTING FACILITY.
5. SHOULD THE pH FALL OUT OF THE ACCEPTABLE RANGE, IT MAY BE MODIFIED (HIGHER) WITH LIME OR (LOWER) WITH IRON SULFATE PLUS SULFUR.
6. IT IS VERY IMPORTANT TO MINIMIZE COMPACTION OF BOTH THE BASE OF THE BIORETENTION AREA AND THE REQUIRED BACKFILL.
7. WHEN BACKFILLING THE BIORETENTION FACILITY, PLACE SOIL IN LIFTS 12" OR GREATER. DO NOT USE HEAVY EQUIPMENT WITHIN THE BIORETENTION BASIN. HEAVY EQUIPMENT CAN BE USED AROUND THE PERIMETER OF THE BASIN TO SUPPLY SOILS AND SAND. GRADE BIORETENTION MATERIALS WITH LIGHT EQUIPMENT SUCH AS A COMPACT LOADER OR A DOZER/LOADER WITH MARSH TRACKS.
8. WHEN BACKFILLING THE TOPSOIL OVER THE SAND LAYER, FIRST PLACE 3 TO 4 INCHES OF TOPSOIL OVER THE SAND, THEN ROTOTILL THE SAND/TOPSOIL TO CREATE A GRADATION ZONE. BACKFILL THE REMAINDER OF THE TOPSOIL TO FINAL GRADE.

PLANTING INSTALLATION:

1. MULCH AROUND INDIVIDUAL PLANTS ONLY. SHREDDED HARDWOOD MULCH IS THE ONLY ACCEPTED MULCH. PINE MULCH AND WOOD CHIPS WILL FLOAT AND MOVE TO THE PERIMETER OF THE BIORETENTION AREA DURING A STORM EVENT AND ARE NOT ACCEPTABLE. SHREDDED MULCH MUST BE WELL AGED (6 TO 12 MONTHS) FOR ACCEPTANCE.
2. THE PLANT ROOT BALL SHOULD BE PLANTED SO 1/8 OF THE BALL IS ABOVE THE FINAL GRADE SURFACE. ROOT STOCK OF THE PLANT MATERIAL SHOULD BE KEPT MOIST DURING TRANSPORT AND ON-SITE STORAGE. THE DIAMETER OF THE PLANTING PIT SHOULD BE AT LEAST SIX INCHES LARGER THAN THE DIAMETER OF THE PLANTING BALL. SET AND MAINTAIN THE PLANT STRAIGHT DURING THE ENTIRE PLANTING PROCESS. THOROUGHLY WATER GROUND BED COVER AFTER INSTALLATION.
3. TREES SHOULD BE BRACED USING 2"x2" STAKES ONLY AS NECESSARY AND FOR THE FIRST GROWING SEASON ONLY. STAKES ARE TO BE EQUALLY SPACED ON THE OUTSIDE OF THE TREE BALL.
4. GRASSES AND LEGUME SEED SHOULD BE TILLED INTO THE SOIL TO A DEPTH OF AT LEAST ONE INCH. GRASS AND LEGUME PLUGS SHOULD BE PLANTED FOLLOWING THE NON-GRASS GROUND COVER PLANTING SPECIFICATIONS.
5. THE TOPSOIL SPECIFICATION PROVIDE ENOUGH ORGANIC MATERIAL TO ADEQUATELY SUPPLY NUTRIENTS FROM NATURAL CYCLING. THE PRIMARY FUNCTION OF THE BIORETENTION STRUCTURE IS TO IMPROVE WATER QUALITY. ADDING FERTILIZERS DEFEATS, OR AT A MINIMUM, IMPEDES THIS GOAL. ONLY ADD FERTILIZER IF WOOD CHIPS OR MULCH IS USED TO AMEND THE SOIL. ROTOTILL UREA FERTILIZER AT A RATE OF 2 POUNDS PER 1,000 SQUARE FEET.

MATERIAL SPECIFICATIONS FOR BIORETENTION:

PARAMETER	SPECIFICATION	SIZE	NOTES
PLANTINGS	SEE LANDSCAPING PLANS	N/A	
PLANTING SOIL (2.5' TO 4' DEEP)	SAND 35–60% SILT 30–55% CLAY 10–25%	N/A	USDA SOIL TYPES LOAMY SAND, SANDY LOAM OR LOAM
MULCH	SHREDDED HARDWOOD	N/A	AGED 6 MONTHS, MIN.
CURTAIN DRAIN & PEA GRAVEL DIAPHRAGM	PEA GRAVEL: ASTM D-448 ORNAMENTAL STONE WASHED COBBLES	PEA GRAVEL NO. 6 STONE: 2" TO 5"	
UNDERDRAIN GRAVEL	AASHTO M-43	0.375" TO 0.75"	
UNDERDRAIN PIPING	ASTM D 1785 OR AASHTO M-278	6" RIGID SCH. 40 PVC	3/8" PERF. @ 6" O.C., 4 HOLES PER ROW; MIN. OR 3" OF GRAVEL OVER PIPES;

RAIN-GARDEN NOTES
NOT TO SCALE

DuBois & King inc.
ENGINEERING • PLANNING • MANAGEMENT • DEVELOPMENT
6 GREEN TREE DRIVE
SO. BURLINGTON, VT 05403
TEL: (802) 878-7661
FAX: (802) 783-7101
www.dubois-king.com
RANDOLPH, VT
SPRINGFIELD, VT
BEDFORD, NH
LACONIA, NH

© Copyright 2017 Dubois & King Inc.

PROFESSIONAL SEAL

NO.	DATE	DESCRIPTION	BY	CK'D
1	4/14/17	MOD'S PER MEETING W/DEC 4/13/17		

HEARTWORKS, INC.
WILLISTON, VT

LOT 17
644 BLAIR PARK RD.

HEARTWORKS, INC.
2017
IMPROVEMENTS

SHEET TITLE

STORMWATER
DETAILS

DRAWN BY: JWP	DATE: 05/02/17
CHECKED BY: RCL	D&K PROJECT #: 419491P2
PROJ. ENG.: MAM	D&K ARCHIVE #:

SHEET NUMBER

C-4.0

I:\419491P2_Pomerleau_Heartworks\dwg\419491P2_StormDetails.dwg 5/10/2017 12:08 PM

TESTING AND DISINFECTING OF WATER MAINS

ALL WATER MAINS SHALL BE CONSTRUCTED, TESTED AND DISINFECTED IN ACCORDANCE WITH AWWA STANDARDS C-600, C651, C-900, THE VERMONT WATER SUPPLY RULE, AND PER THE WASTEWATER SYSTEM & POTABLE WATER SUPPLY PERMIT. MINIMUM TESTING PRESSURE SHALL BE 1.5 TIMES THE WORKING PRESSURE OF THE INSTALLED LINE OR 200 PSI, WHICHEVER IS GREATER, AND WILL BE MONITORED AT THE LOWEST ELEVATION IN THE LENGTH OF THE PIPELINE BEING TESTED. ALL TEST RESULTS SHALL BE PROVIDED TO THE OWNER & DESIGN ENGINEER.

MAXIMUM ALLOWABLE LEAKAGE WILL BE L= SD (SQ. ROOT P) AS OUTLINED IN AWWA STANDARDS
133,200

WHERE:
L =ALLOWABLE LEAKAGE, IN GALLONS PER HOUR
S =LENGTH OF PIPE TESTED, IN FEET
D =NOMINAL DIAMETER OF THE PIPE, IN INCHES
P =AVERAGE TEST PRESSURE DURING THE LEAKAGE TEST, IN PSI (GAUGE)

A) TESTING:
1. ALL TESTS SHALL BE CONDUCTED BY AND AT THE EXPENSE OF THE CONTRACTOR.
2. THE CONTRACTOR SHALL REVIEW & BE FAMILIAR WITH ALL REQUIREMENTS & TESTING METHODS.
3. SHALL NOT BE LESS THAN 50 PSI AT THE HIGHEST POINT ALONG THE TEST SECTION.
4. SHALL NOT EXCEED PIPE OR THRUST RESTRAINT DESIGN PRESSURES.
5. SHALL BE OF AT LEAST TWO HOUR DURATION.
6. SHALL NOT EXCEED TWO TIMES THE RATED PRESSURE OF THE VALVES WHEN THE PRESSURE BOUNDARY OF THE TEST SECTION INCLUDES CLOSED GATE VALVES.

B) FLUSHING:
1. FILL THE MAIN WITH POTABLE WATER TO ELIMINATE AIR POCKETS. COMPLETE FLUSHING OF THE PIPELINE TO WASH OUT ALL DIRT, DEBRIS, ETC. WHICH MAY HAVE ACCUMULATED IN THE PIPELINE DURING CONSTRUCTION. A MINIMUM FLUSHING VELOCITY OF 3.0 FT/SEC SHALL BE UTILIZED, PER AWWA C651. A REDUCING AGENT SHALL BE USED AT THE POINT OF FLUSHING TO ELIMINATE THE FREE CHLORINE RESIDUAL.

C) DISINFECTING: CONTINUOUS-FEED METHOD
1. FOLLOWING FLUSHING WITH CLEAN CLEAR WATER, THE CONTRACTOR WILL ADD CHLORINE TO THE ENTIRE PIPELINE VOLUME OF WATER SUCH THAT THE WATER WILL HAVE NOT LESS THAN 25 MG/L FREE CHLORINE, AND LET THE MIXTURE SET FOR AT LEAST 24 HOURS.
2. AFTER THE 24-HOUR DURATION, THE WATER IN THE PIPELINE SHALL BE TESTED FOR RESIDUAL FREE CHLORINE AND MUST CONTAIN A MINIMUM OF 10 MG/L CHLORINE. IF LESS THAN 10 MG/L ARE FOUND, THEN THE DISINFECTING PROCEDURE SHALL BE REPEATED UNTIL AT LEAST 10 MG/L CHLORINE RESIDUAL IS INDICATED BY TEST.
3. UPON SUCCESSFUL COMPLETION OF STEP 2 ABOVE, THE PIPELINE SHALL BE FLUSHED AGAIN UNTIL THE CHLORINE CONCENTRATION IN THE PIPELINE IS NO HIGHER THAN THAT PREVAILING IN THE SUPPLY SYSTEM. A REDUCING AGENT SHALL BE USED TO ELIMINATE THE FREE CHLORINE RESIDUAL IN THE FLUSHING PROCESS. IF THE CHLORINATED WATER COULD CAUSE DAMAGE TO THE ENVIRONMENT WHEN DISCHARGED, A NEUTRALIZING CHEMICAL SHALL BE APPLIED TO THE WATER TO NEUTRALIZE THE RESIDUAL CHLORINE.

AFTER FINAL FLUSHING AND BEFORE THE NEW WATER MAIN IS CONNECTED TO THE DISTRIBUTION SYSTEM, A SAMPLE SHALL BE COLLECTED FROM DIFFERENT POINTS IN THE NEW MAIN, AND SUBMITTED TO THE VERMONT HEALTH DEPARTMENT FOR ANALYSIS. ALL SAMPLES SHALL SHOW THE ABSENCE OF COLIFORM ORGANISMS AND, IF REQUIRED THE PRESENCE OF A CHLORINE RESIDUAL. (AWWA C651-99.) IF THE INITIAL DISINFECTING FAILS TO PRODUCE SAMPLES, WHICH PASS THE V.S.H.D. REQUIREMENTS FOR POTABLE DRINKING WATER, THEN THE NEW MAIN SHALL BE REFLUSHED AND SHALL BE RESAMPLED UNTIL SATISFACTORY TEST RESULTS ARE OBTAINED.

UPON SATISFACTORY RESULTS BY THE VERMONT STATE HEALTH DEPARTMENT, THE PIPELINE MAY BE PLACED IN SERVICE. ALL COSTS FOR WATER, MATERIALS, EQUIPMENT AND LABOR TO PERFORM THE REQUIRED TESTING DISINFECTING, AND FLUSHING OF THE PIPELINE SHALL BE PAID BY THE CONTRACTOR.

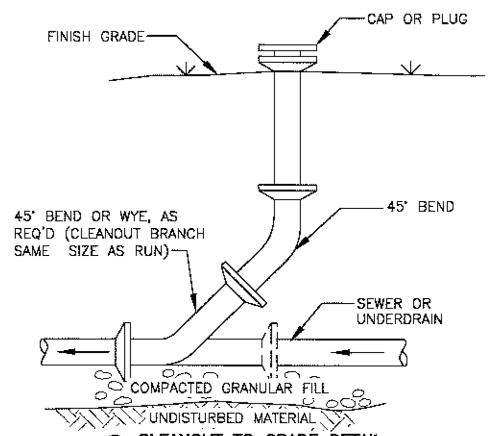

③ **CLEANOUT TO GRADE DETAIL**
NOT TO SCALE

NOTES:
1. DETAILS NO.1a & NO.1c ALLOWABLE WATER PIPE DEFLECTIONS MAY BE USED TO ACCOMPLISH THE RELOCATIONS IN LIEU OF ELBOWS AND FITTINGS.
2. DETAILS NO.1b, NO.1c & NO.1d THE SEWER PIPE SHALL BE CONSTRUCTED OR RECONSTRUCTED OF DUCTILE IRON PIPE WITH PUSH ON OR MECHANICAL JOINTS AND PRESSURE TESTED FOR AT LEAST 20' EACH SIDE OF WATER MAIN.
3. DETAILS NO.1a, NO.1b, N.O1c & NO.1d WATER MAIN TO BE RECONSTRUCTED SHALL BE PUSH-ON OR M.J. D.I. PIPE FOR A DISTANCE OF 10 FEET EACH SIDE OF THE CENTERLINE OF THE SEWER.
4. DETAILS NO.1c& NO.1d UNDER NO CIRCUMSTANCES SHALL THE SEWER BE LESS THAN 18" ABOVE THE WATER MAIN.
5. SEE SPECIFICATION 02705 FOR DETAILS, DESCRIPTIONS AND INSTRUCTIONS.

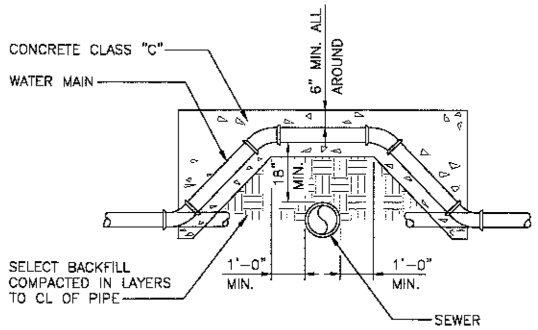

DETAIL NO. 1a

WATER MAIN RELOCATION – ABOVE SEWER
(PREFERRED METHOD)
NOT TO SCALE

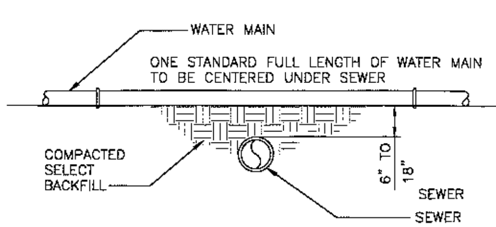

DETAIL NO. 1b

WATER MAIN LESS THAN 18" ABOVE SEWER
NOT TO SCALE

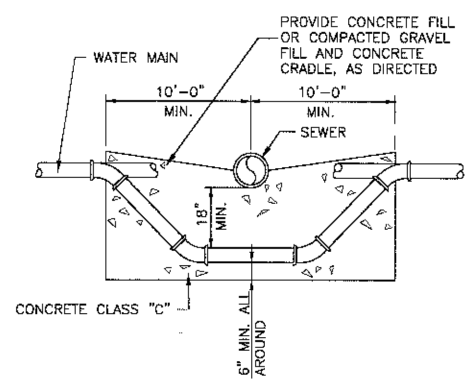

DETAIL NO. 1c

WATER MAIN RELOCATION – BELOW SEWER*
NOT TO SCALE
* ONLY IF WATER MAIN CAN NOT GO OVER SEWER LINE (NOT A RECOMMENDED METHOD)

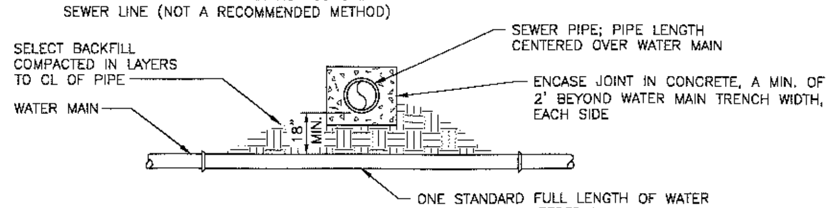

DETAIL NO. 1d

WATER MAIN BELOW SEWER*
NOT TO SCALE
* NOT A RECOMMENDED METHOD

① **PIPE CROSSING DETAIL**
NOT TO SCALE

LEAKAGE TESTING FOR SANITARY MAINS

Leakage Tests: When tested, the leakage inward and outward of a gravity sewer including manholes shall not exceed 200 gallons per inch of pipe diameter per mile per day. Upon completion of construction, a sewer line shall be tested in accordance with one of the following procedures:

(1) WATER TESTING

(A) Plug or cap all service laterals, stubs, and fittings. Place adequate bracing to withstand thrust forces.

(B) A tapped plumber's plug should be inserted in the downstream manhole inlet sewer. The water supply connection is made at this point, but never directly from a public water supply system or hydrant unless a backflow preventer is used.

(C) A stand pipe is tightly connected at the upstream end of the sewer. The height of the stand pipe shall be at least two feet higher than any point in the sewer or two feet higher than the highest known ground water table, whichever is higher. A manhole may be used as a stand pipe.

(D) Water is added at the downstream connection in order to avoid trapping air bubbles or pockets. The line shall be filled to the elevation designated in the stand pipe.

136 1-A-03(k)(1)(E) Sewer Collection Systems

(E) Allow the line to stand with water for at least a two hour stabilization period or such shorter period as may be required to achieve stabilized readings of water loss over three consecutive 15 minute periods. This allows air to escape and absorption to take place.

(F) Fill the sewer line to the reference mark and continue the test for at least one hour. Maintain the minimum head throughout the test, adding any volume of water required and including that volume in the leakage.

(G) Convert the leakage to the units specified.

(2) AIR TESTING

(A) Procedures

(i) Determine the test time for the section of line to be tested using Table 1-A-3 or 1-A-4 or the formulas in Chart 1-A-1.

(ii) Plug all openings in the test section.

(iii) Add air until the internal pressure of the line is raised to approximately 4.0 pounds/square inch (psi) greater than the average pressure of any ground water. After this pressure is
reached, allow the pressure to stabilize. The pressure will normally drop as the air temperature stabilizes. This usually takes 2 to 5 minutes depending on the pipe size. The pressure may be reduced to 3.5 psi before starting the test.

(iv) When the pressure has stabilized and is at or above the starting test pressure of 3.5 psi above the pipe, start the test. If the pressure drops more than 1.0 psi during the test time, the line is presumed to have failed the test. If a 1.0 psi drop does not occur within the test time, the line has passed the test.

(B) Test time

(i) Table 1-A-3 shows the required test time, T, in minutes/100 feet of pipe for each nominal pipe size. Test times are for a 1.0 psi pressure drop from 3.5 to 2.5 psi. Table 1-A-3 has been established using the formulas contained in Chart 1-A-1.

(ii) If the section of line to be tested includes more than one pipe size, calculate the test time for each size and add the test times to arrive at the total test time for the section.

(iii) It is not necessary to hold the test for the whole period when it is clearly evident that the rate of air loss is less than the allowable.

CHART 1-A-1

FORMULAS AND ALLOWABLE AIR LOSS STANDARDS

Calculate the required test time at a given allowable air loss as follows:

$$T = (K) \times \frac{(D)^2\,(L)}{(Q)}$$

Calculate air loss with a timed pressure drop as follows:

$$Q = (K) \times \frac{(D)^2\,(L)}{(T)}$$

Symbols:
D = nominal size, in. L = length of line of one pipe size, ft.
K = 0.534 x 10-6 for S.I. units Q = air loss, ft 3/min.
K = 0.371 x 10-3 for inch pound units T = time for pressure to drop 1.0 psi, min.

(C) An appropriate allowable air loss, Q, in cubic feet per minute, has been established for each nominal pipe size. Based on field experience, the Q value that has been selected will enable detection of any significant leak Table 1-A-4 lists the Q established for each pipe size.

TABLE 1-A-3 MINIMUM TEST TIME FOR VARIOUS PIPE SIZES

Nominal Pipe in inches	Size T (time) min/100 ft.	Nominal Pipe Size in inches	T (time) min/100 ft.
3	0.2	21	3.0
4	0.3	24	3.6
6	0.7	27	4.2
8	1.2	30	4.8
10	1.5	33	5.4
12	1.8	36	6.0
15	2.1	39	6.6
18	2.4	42	7.3

TABLE 1-A-4 ALLOWABLE AIR LOSS FOR VARIOUS PIPE SIZES

Nominal Pipe Size in Inches	Q, ft3/min	Nominal Pipe Size in Inches	Q, ft3/min
3	2	21	5.5
4	2	24	6
6	2	27	6.5
8	2	30	7
10	2.5	33	7.5
12	3	36	8
15	4	39	8.5
18	5	42	9

LEAKAGE TESTING FOR SANITARY MANHOLES

All manholes shall be tested for leakage. Leakage testing of gravity sewers utilizing the water testing procedures takes into account the leakage from one manhole in the test section. Otherwise, manholes shall be tested for leakage in accordance with the following procedure:

- After the manhole has been assembled in place, all lifting holes and exterior joints shall be filled and pointed with non shrinking mortar. All pipes and other openings into the manhole shall be suitably plugged and the plugs placed to prevent blowout.
- Each manhole shall be checked for exfiltration by filling with water to the top of the cone section. A stabilization period of one hour shall be provided to allow for absorption. At the end of this period, the manhole shall be refilled to the top of the cone, if necessary, and the measuring time of at least six hours begun. At the end of the test period, the manhole shall be refilled to the top of the cone measuring the volume of water added.
- This amount shall be converted to a 24-hour rate and the leakage determined on the basis of depth. The leakage for each manhole shall not exceed one gallon per vertical foot for a 24 hour period for exfiltration and there shall be no visible infiltration.

Alternatively, the manhole may be tested for leakage using the following procedure:

- All lifting hole and exterior joints shall be filled and pointed with an approved non-shrinking mortar. The completed manhole shall not be backfilled prior to testing. Manholes that have been backfilled shall be excavated to expose the entire exterior prior to vacuum testing or the manhole shall be tested for leakage by means of a hydrostatic test.
- All pipes and other openings in the manhole shall be suitably plugged in a manner to prevent displacement.
- A plate with an inflatable rubber ring the size of the top of the manhole shall be installed by inflating the ring with air to a pressure adequate to prevent leakage of air between the rubber ring and the manhole wall.
- Air shall then be pumped out of the manhole through an opening in the plate until a vacuum is created inside of the manhole equal to 10 inches of mercury on an approved vacuum gauge. The removal of the air shall then be stopped and the test time begun.
- The vacuum must not drop below 9 inches of mercury within a 2 minute test period. If more than 1 inch of drop in vacuum occurs within the 2 minute test period the manhole has failed the test and shall be repaired or reconstructed and retested.
- Following satisfactory test results, the manhole may be backfilled.

Upon finding that the final plans complied with all requirements of the *Williston Development Bylaw* and all conditions imposed on the approval of Discretionary Permit 17-19, the Williston Development Review Board/Administrator approved the final plans for the (name Subdivision) on the 19 day of ~~(month)~~ MAY, 20 17.
~~DRB Chair~~

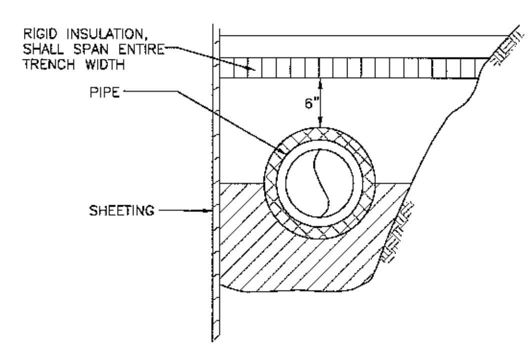

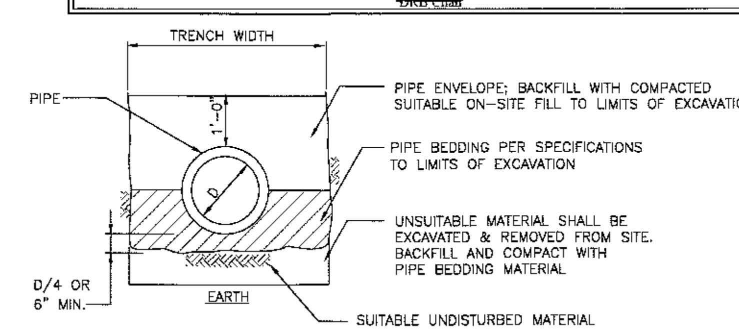

NOTES:
1. MINIMUM INSULATION THICKNESS = 2". FOR EACH FOOT LACKING IN COVER ADD 1" OF INSULATION. EXAMPLE: FOR A WATER MAIN, WHEN 5' COVER (6' REQUIRED) – USE 2" THICK INSULATION. WHEN 4' DEEP – USE 3" THICK INSULATION, AND SO ON.

② **UTILITY TRENCH INSULATION DETAILS (WATER, SANITARY, STORMWATER)**
NOT TO SCALE

UNINSULATED PIPE BURY DEPTHS:	
STORM DRAIN	5' MIN
WATER	6' MIN
UNDERDRAIN	4' MIN
SANITARY (UNPLOWED)	4' MIN
SANITARY (PLOWED)	5' MIN

DuBois & King inc.
ENGINEERING • PLANNING • MANAGEMENT • DEVELOPMENT
6 GREEN TREE DRIVE
SO. BURLINGTON, VT 05403
TEL: (802) 878-7661
FAX: (802) 783-7101
www.dubois-king.com
RANDOLPH, VT
SPRINGFIELD, VT
BEDFORD, NH
LACONIA, NH

© Copyright 2017 Dubois & King Inc.

PROFESSIONAL SEAL

NO.	DATE	DESCRIPTION	BY	CK'D

HEARTWORKS, INC.
WILLISTON, VT

LOT 17
644 BLAIR PARK RD.

HEARTWORKS, INC.
2017
IMPROVEMENTS

SHEET TITLE

WATER & SEWER DETAILS

DRAWN BY	DATE
JWP	05/02/17
CHECKED BY	D&K PROJECT #
RCL	419491P2
PROJ. ENG.	D&K ARCHIVE #
MAM	

SHEET NUMBER

C-4.1

I:\419491P2_Pomerleau_Heartworks\dwg\419491P2_StormDetails.dwg 5/10/2017 12:08 PM

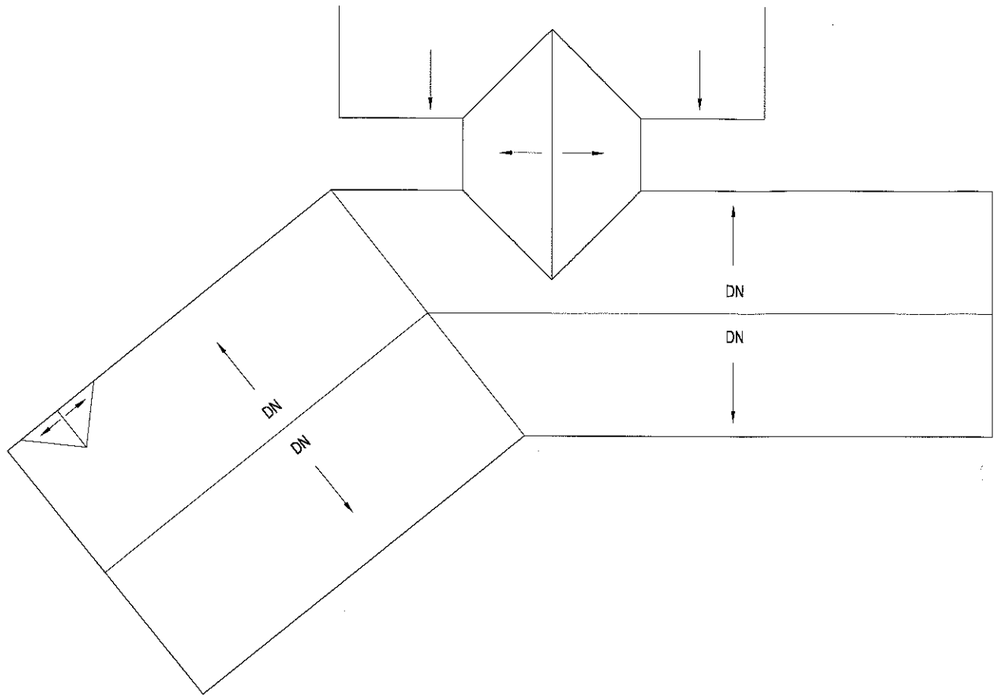

32 ROOF PLAN

Scale: 1/8" = 1'-0"

Upon finding that the final plans complied with all requirements of the *Williston Development Bylaw* and all conditions imposed on the approval of Discretionary Permit 17-14 the Williston Development Review Board/Administrator approved the final plans for the (name Subdivision) on the 14 day of (month), 20 17.

DRB Chair

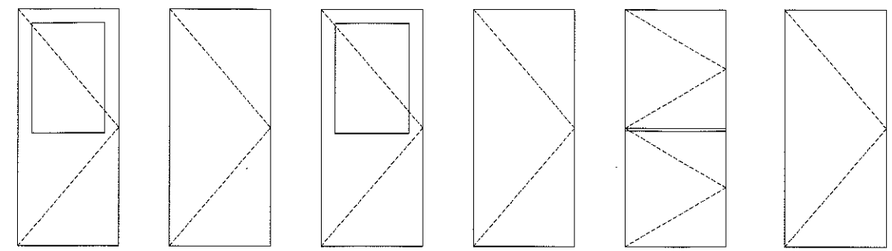

DOOR A: TEMPERED GLASS OFFICE LOCKSET

DOOR B: PRIVACY LOCKSET

DOOR C: ENTRY LOCKSET WEATHERPROOF GASKETING CLOSER

DOOR D: OFFICE LOCKSET

DOOR E: DOUBLE/DUTCH DOOR PASSAGE LOCKSET

DOOR F: STROEROOM LOCKSET

30 DOOR TYPES

Scale: 1/2" = 1'-0"

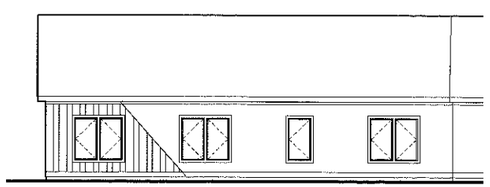

22 ELEVATION

Scale: 1/8" = 1'-0"

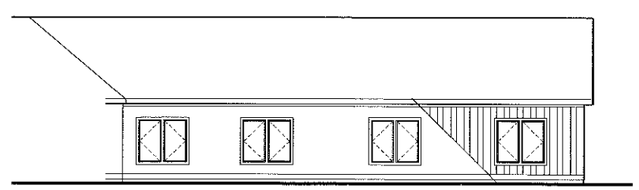

21 ELEVATION

Scale: 1/8" = 1'-0"

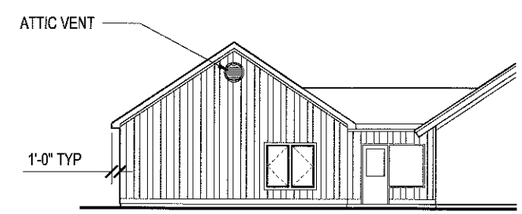

20 ELEVATION

Scale: 1/8" = 1'-0"

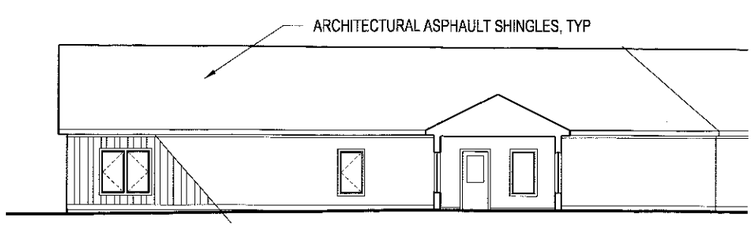

12 ELEVATION

Scale: 1/8" = 1'-0"

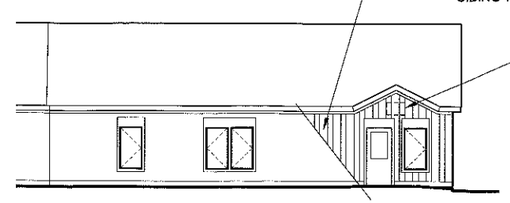

11 ELEVATION

Scale: 1/8" = 1'-0"

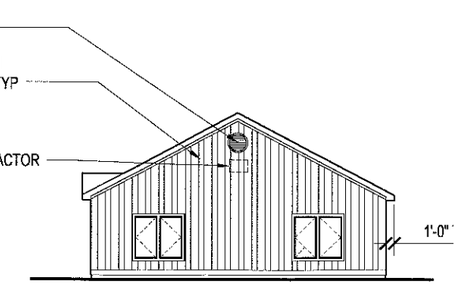

10 ELEVATION

Scale: 1/8" = 1'-0"

SBA
SMITH BUCKLEY ARCHITECTS
431 PINE ST. STE 210 BURLINGTON 05401
802.540.0323 www.SBAVT.com

Building Owner:
Brunswick, LLC
69 College St.
Burlington, VT 05401
802-863-8210

Construction Manager:
Neagley & Chase
Construction Company
66 Bowdoin St.
S. Burlington, VT 05403
802-658-6320

Structural Engineer:
Hardy Structural
Engineering
875 Roosevelt HWY
Colchester, VT 05446
802-355-8360

COPYRIGHT © 2015
SMITH BUCKLEY ARCHITECTS PLLC
ALL RIGHTS RESERVED

HEARTWORKS
Daycare Addition
644 Blair Park
Williston, VT

DATE: February 7, 2017
REVISIONS

CONSTRUCTION DOCUMENTS

ROOF PLAN, ELEVATIONS, & DOORS

SCALE:

A200

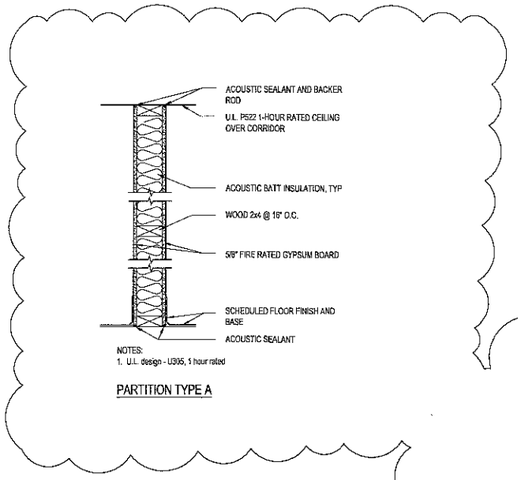

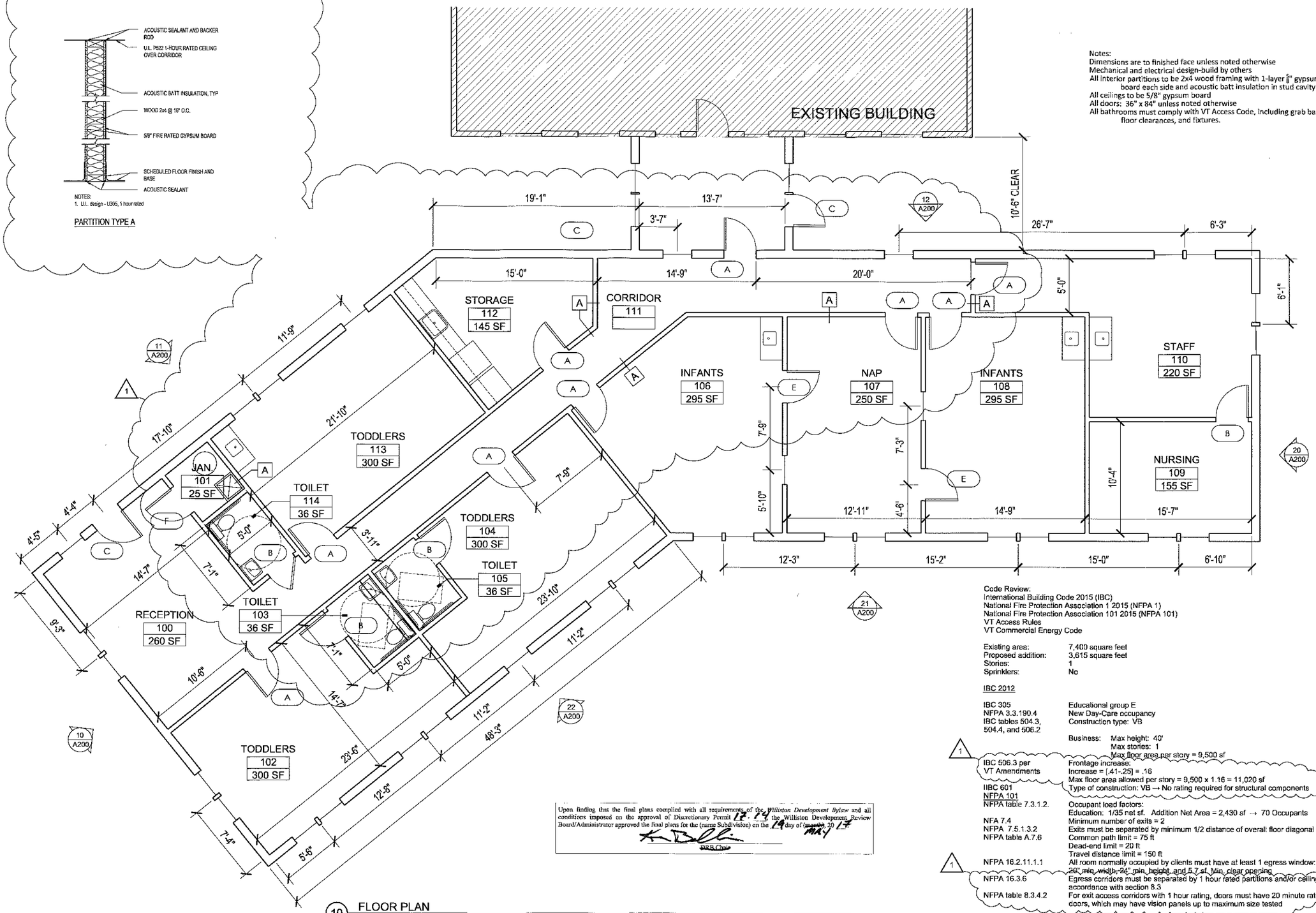

Notes:
Dimensions are to finished face unless noted otherwise
Mechanical and electrical design-build by others
All interior partitions to be 2x4 wood framing with 1-layer 5/8" gypsum board each side and acoustic batt insulation in stud cavity
All ceilings to be 5/8" gypsum board
All doors: 36" x 84" unless noted otherwise
All bathrooms must comply with VT Access Code, including grab bars, floor clearances, and fixtures.

Code Review:
International Building Code 2015 (IBC)
National Fire Protection Association 1 2015 (NFPA 1)
National Fire Protection Association 101 2015 (NFPA 101)
VT Access Rules
VT Commercial Energy Code

Existing area:	7,400 square feet
Proposed addition:	3,615 square feet
Stories:	1
Sprinklers:	No

IBC 2012

IBC 305	Educational group E
NFPA 3.3.190.4	New Day-Care occupancy
IBC tables 504.3, 504.4, and 506.2	Construction type: VB
	Business: Max height: 40'
	Max stories: 1
	Max floor area per story = 9,500 sf
IBC 506.3 per VT Amendments	Frontage increase.
	Increase = [.41-.25] = .16
	Max floor area allowed per story = 9,500 x 1.16 = 11,020 sf
IIBC 601	Type of construction: VB → No rating required for structural components
NFPA 101	
NFPA table 7.3.1.2.	Occupant load factors:
	Education: 1/35 net sf. Addition Net Area = 2,430 sf → 70 Occupants
NFA 7.4	Minimum number of exits = 2
NFPA 7.5.1.3.2	Exits must be separated by minimum 1/2 distance of overall floor diagonal distance
NFPA table A.7.6	Common path limit = 75 ft
	Dead-end limit = 20 ft
	Travel distance limit = 150 ft
NFPA 16.2.11.1.1	All room normally occupied by clients must have at least 1 egress window: 20" min. width, 24" min. height, and 5.7 sf. Min. clear opening
NFPA 16.3.6	Egress corridors must be separated by 1 hour rated partitions and/or ceilings in accordance with section 8.3
NFPA table 8.3.4.2	For exit access corridors with 1 hour rating, doors must have 20 minute rated doors, which may have vision panels up to maximum size tested

Upon finding that the final plans complied with all requirements of the *Williston Development Bylaw* and all conditions imposed on the approval of Discretionary Permit 17-17 the Williston Development Review Board/Administrator approved the final plans for the (name Subdivision) on the 19 day of (month) MAY, 20 17.

DRB Chair

10 FLOOR PLAN

Scale: 1/4" = 1'-0"

SBA
SMITH BUCKLEY ARCHITECTS
431 PINE ST. STE 210 BURLINGTON 05401
802.540.0323 www.SBAVT.com

Building Owner:
Brunswick, LLC
69 College St.
Burlington, VT 05401
802-863-8210

Construction Manager:
Neagley & Chase
Construction Company
66 Bowdoin St.
S. Burlington, VT 05403
802-658-6320

Structural Engineer:
Hardy Structural
Engineering
875 Roosevelt HWY
Colchester, VT 05446
802-355-8360

COPYRIGHT ©2015
SMITH BUCKLEY ARCHITECTS PLLC
ALL RIGHTS RESERVED

HEARTWORKS
Daycare Addition
644 Blair Park
Williston, VT

DATE: February 7, 2017
REVISIONS
1 03-21-17

CONSTRUCTION DOCUMENTS

LEVEL 1 FLOOR PLAN

SCALE:

A100

Code Review:
International Building Code 2015 (IBC)
National Fire Protection Association 1 2015 (NFPA 1)
National Fire Protection Association 101 2015 (NFPA 101)
VT Access Rules
VT Commercial Energy Code

Existing area:	7,400 square feet
Proposed addition:	3,615 square feet
Stories:	1
Sprinklers:	No

IBC 2015

IBC 305	Educational group E
NFPA 3.3.190.4	New Day-Care occupancy
IBC tables 504.3, 504.4, and 506.2	Construction type: VB
	Business: Max height: 40' Max stories: 1 Max floor area per story = 9,500 sf
IBC 506.3 per VT Amendments	Frontage increase: Increase = [.41-.25] = .16 Max floor area allowed per story = 9,500 x 1.16 = 11,020 sf
IIBC 601	Type of construction: VB → No rating required for structural components

NFPA 101

NFPA table 7.3.1.2.	Occupant load factors: Education: 1/35 net sf. Addition Net Area = 2,430 sf → 70 Occupants
NFA 7.4	Minimum number of exits = 2
NFPA 7.5.1.3.2	Exits must be separated by minimum 1/2 distance of overall floor diagonal distance
NFPA table A.7.6	Common path limit = 75 ft Dead-end limit = 20 ft Travel distance limit = 150 ft
NFPA 16.2.11.1.1	All room normally occupied by clients must have at least 1 egress window: 20" min. width, 24" min. height, and 5.7 sf. Min. clear opening
NFPA 16.3.6	Egress corridors must be separated by 1 hour rated partitions and/or ceilings in accordance with section 8.3
NFPA table 8.3.4.2	For exit access corridors with 1 hour rating, doors must have 20 minute rated doors, which may have vision panels up to maximum size tested

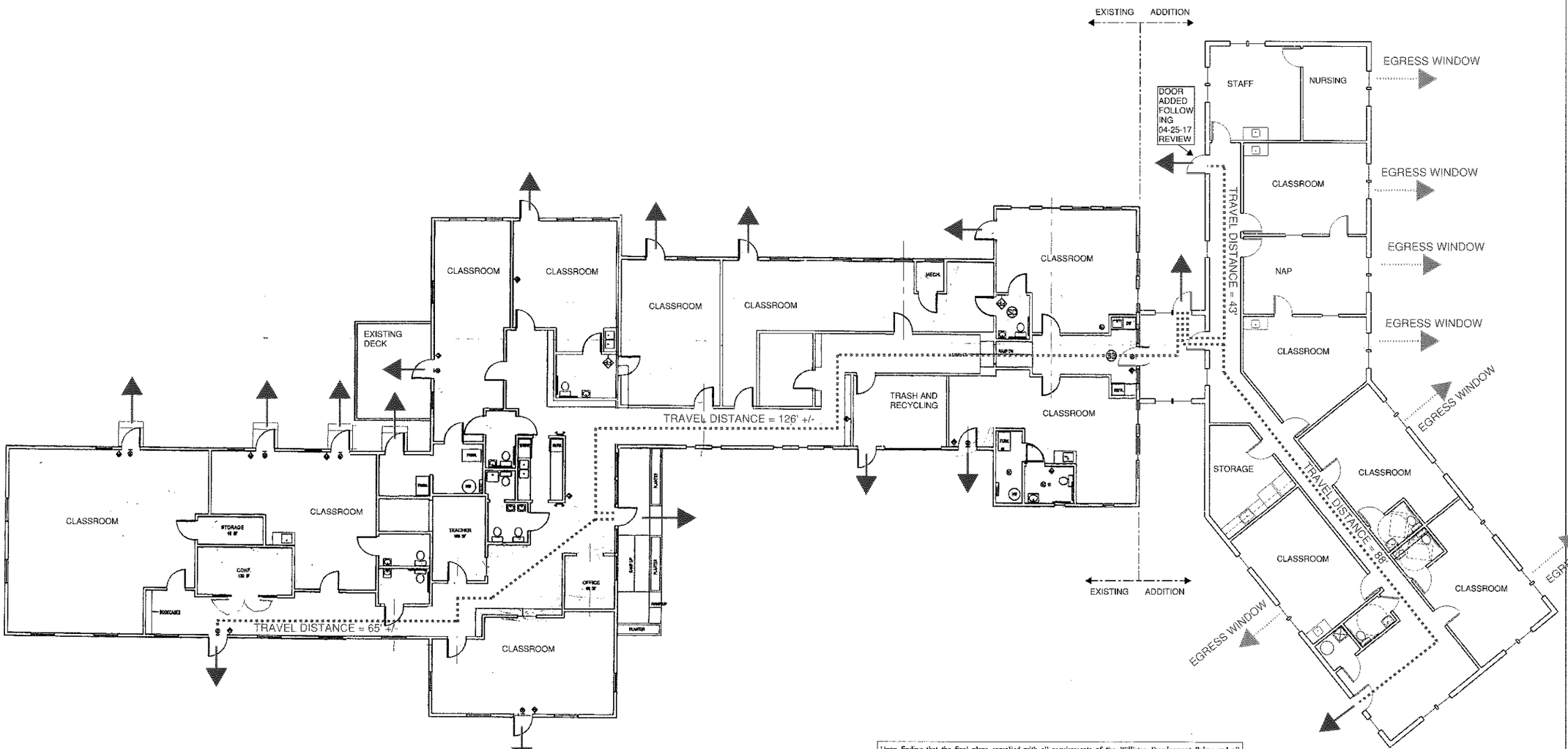

Upon finding that the final plans complied with all requirements of the *Williston Development Bylaw* and all conditions imposed on the approval of Discretionary Permit 17-14, the Williston Development Review Board/Administrator approved the final plans for the (name Subdivision) on the 1 day of (~~month~~) May, 20 17

K. Bell
DRB Chair

10 FLOOR PLAN

Scale: 1/8" = 1'-0"

SBA
SMITH BUCKLEY ARCHITECTS
431 PINE ST STE 210 BURLINGTON 05401
802 540 0323 www.SBAVT.com

Building Owner:
Brunswick, LLC
69 College St.
Burlington, VT 05401
802-863-8210

Construction Manager:
Neagley & Chase
Construction Company
66 Bowdoin St.
S. Burlington, VT 05403
802-658-6320

Structural Engineer:
Hardy Structural
Engineering
875 Roosevelt HWY
Colchester, VT 05446
802-355-8360

COPYRIGHT © 2015
SMITH BUCKLEY ARCHITECTS PLLC
ALL RIGHTS RESERVED

HEARTWORKS
Daycare Addition
644 Blair Park
Williston, VT

DATE: April 26, 2017
REVISIONS

CONSTRUCTION DOCUMENTS

LIFE SAFETY PLAN

SCALE: 1/8" = 1'-0"

LS 100