Public Works Standard Specifications

TOWN OF WILLISTON

1763

2010
Revised, April 2013

SECTION 1 GENERAL REQUIREMENTS
1.1 Work to Conform 1-1
1.2 Protection of Work Persons and the Public 1-1
1.3 Blasting Requirements 1-1
1.4 Protection and Repair of Existing Utilities 1-2
1.5 Installation of New Utilities 1-2
1.6 Reconstruction of Existing Utilities 1-2
1.7 Permits 1-2
1.8 Work Outside Property Limits or Within Public Rights-of-Way .. 1-3
1.9 Standards for Pavement Cut 1-3
1.10 Supervisors on the Job Site 1-3
1.11 Construction/Warning Signs 1-3
1.12 Maintenance and Protection of Traffic 1-4
1.13 Testing and Inspection Requirements 1-4
1.13.1 General 1-4
1.13.2 Sanitary Sewer Systems 1-5
1.13.3 Water Distribution Systems 1-5
1.13.4 Storm Drainage Systems 1-6
1.13.5 Highways 1-6
1.14 Project Escrow Account 1-7
1.15 Pre-Construction Meeting 1-8
1.16 Acceptance of Roadway 1-9
1.17 Engineering Services During and at the End of Construction . 1-10
1.18 Town Engineer Fees 1-10
1.19 Town Attorney Fees 1-11
1.20 Submittal of As-Built Drawings 1-11
1.20.1 Sanitary Sewers 1-11
1.20.2 Water Distribution 1-12
1.20.3 Storm Drains 1-12
1.20.4 Highways 1-12
1.20.5 Record Drawings 1-13
1.20.6 Final Drawings 1-13

SECTION 2 SANITARY SEWER SYSTEMS
2.1 General 2-1
2.2 Materials 2-2
2.2.1 Manholes 2-2
2.2.2 Pipe 2-2
2.2.3 Service Connections 2-3
2.2.4 Wastewater Pump Stations 2-3
2.3 Installation 2-4
2.3.1 PVC Pipe 2-4
2.3.2 Pipe Bedding 2-4
2.4 Testing Procedures 2-4

2.4.1 Low Pressure Air Test 2-5
2.4.2 Deflection Test 2-6
2.4.3 Force Main Hydrostatic and Leakage Test 2-7
2.4.4 Manhole Vacuum Test 2-7

SECTION 3 WATER DISTRIBUTION SYSTEMS
3.1 General 3-1
3.2 Materials 3-2
3.2.1 Ductile Iron Pipe 3-2
3.2.2 Fittings 3-2
3.2.3 Anchor Tees and Anchor Couplings 3-2
3.2.4 Gate Valves 3-2
3.2.5 Tapping Valves and Tapping Sleeves 3-3
3.2.6 Valve Boxes 3-3
3.2.7 Air Release Valves 3-3
3.2.8 Pipeline Couplings 3-3
3.2.9 Fire Hydrants and Branch Connections 3-4
3.2.10 Services 3-4
3.3 Installation 3-5
3.4 Testing and Disinfection 3-5

SECTION 4 STORM DRAINAGE SYSTEMS
4.1 General 4-1
4.2 Materials 4-2
4.2.1 Pipe 4-2
4.2.2 Culverts 4-2
4.2.3 Catch Basins 4-2
4.2.4 Storm Manholes 4-3
4.2.5 Stone Fill 4-4
4.3 Installation 4-4
4.4 Foundation Drains 4-4
4.5 Driveway Access Culvert Replacement or Maintenance 4-4

SECTION 5 STREETS
5.1 General 5-1
5.2 Definition of Type 5-2
5.2.1 Dense Residential 5-2
5.2.2 Rural Residential 5-3
5.2.3 Commercial/Industrial 5-3
5.2.4 Urban/Grid Streets 5-3
5.2.5 Private Street 5-3
5.2.6 Private Driveway 5-3
5.3 Materials 5-4
5.3.1 Geotextile Fabrics 5-4

5.3.2 Subbase 5-4
5.3.3 Concrete 5-4
5.3.4 Bituminous Pavement 5-5
5.3.5 Street Signs 5-5
5.3.6 Traffic Signals 5-5
5.3.7 Pavement Painting 5-6
5.3.8 Guardrail 5-6
5.3.9 Monuments 5-6
5.4 Installation 5-7
5.4.1 Concrete 5-7
5.4.2 Bituminous Pavement 5-7
5.4.3 Lawns and Grassed Areas 5-8
5.5 Testing 5-8
5.5.1 General 5-8
5.5.2 Subbase and Granular Material 5-9
5.5.3 Concrete 5-9
5.5.4 Paving 5-9

SECTION 6 EROSION CONTROL MEASURES
6.1 General 6-1
6.2 Materials 6-1
6.3 Installation 6-1
6.3.1 Dust Control 6-1
6.3.2 Dewatering 6-2

SECTION 7 STREET TREE PROTECTION AND PLANTING
7.1 General 7-1
7.2 Materials 7-1
7.2.1 Tree Types and Sizes 7-1
7.3 Installation 7-3
7.3.1 Planting Procedure 7-3
7.3.2 Planting Locations 7-4
7.4 Protection of Existing Trees During Construction 7-5
7.4.1 Protective Tree Fencing 7-5
7.4.2 Pruning 7-6
7.4.3 Transplanting an Existing Tree to Another Location 7-6
7.4.4 Removal of an Existing Street Tree 7-6
7.4.5 Street Trees Damaged During Construction 7-6

SECTION 8 PATHWAYS
8.1 General 8-1
8.2 Materials 8-1
8.2.1 Pathway Subgrade 8-1

8.2.2 Pathway Subbase 8-1
8.2.3 Geotextile Fabrics 8-2
8.2.4 Pathway Surface 8-2
8.2.5 Bridges/Crossings/Culverts 8-2
8.2.6 Pathway Signs 8-2
8.3 Installation 8-2
8.3.1 Subbase 8-2
8.3.2 Surface 8-3
8.3.3 Pathway Width 8-3
8.3.4 Pathway Signs 8-3
8.3.5 Bridges/Crossing/Culverts 8-3
8.3.6 Buffer 8-3
8.3.7 Drainage Ditches 8-3
8.4 Accessibility 8-4
8.5 Maintenance 8-4

SECTION 9 STREET LIGHTING SYSTEMS
9.1 General 9-1
9.2 Materials & Installation 9-1
9.2.1 Lighting 9-1
9.2.2 Underground Lighting Circuit 9-2
9.2.3 Power Supply 9-2

APPENDIX A LIST OF FORMS AND APPLICATIONS

APPENDIX B SANITARY SEWER DETAILS

APPENDIX C WATER DISTRIBUTION DETAILS

APPENDIX D STORM DRAINAGE DETAILS

APPENDIX E STREET DETAILS

APPENDIX F EROSION CONTROL DETAILS

APPENDIX G TREE PROTECTION DETAILS

APPENDIX H PATHWAY DETAILS

SECTION 1

GENERAL REQUIREMENTS

SECTION 1 GENERAL REQUIREMENTS

1.1 WORK TO CONFORM

All materials, design, and workmanship must meet nationally accepted standards and practices along with all applicable standards of the Town of Williston, including the Town's Public Works Standards and the Unified Development Bylaws. The Town recognizes the State of Vermont Agency of Transportation Standard Specifications for Construction (latest edition as a supplemental source for standards not detailed in the Town of Williston specifications). Where a conflict arises between the published standards established in this manual and other published standards, the more stringent shall apply.

During the progress of construction and upon completion, all work shall conform to these standards and the lines, levels, and grades as indicated on plans accepted by the Town of Williston. Field revisions necessitated by the conditions of the site must be approved by the Design/Project Engineer and accepted by the Public Works Director prior to acceptance of the completed work. The work shall be performed in a thoroughly substantial and workmanlike manner.

1.2 PROTECTION OF WORK PERSONS AND THE PUBLIC

Work persons and the public shall be protected by the Contractor from any and all hazards connected with the construction work. Open trenches, materials, or equipment within the working limits of the public Right-of-Way are to be guarded by the use of adequate barricades or flag persons. All barricades left in position overnight are to be properly lighted. Kerosene pots are not acceptable. When work narrows the usable pavement, a flag person shall be employed to aid the flow of traffic so that there will be no undue delays. **(The Contractor shall be held responsible for the safety of all work persons and the general public and all damage to property resulting from a failure on the part of the Contractor to protect persons or property from the hazard of open trenches, materials, or equipment at any time of the day or night within the working area.)** All work shall be in conformance to applicable VOSHA requirements. During construction within the public Right-of-Way, the Town of Williston will be provided a Certificate of Insurance naming the Town as additional insured by the Contractor.

1.3 BLASTING REQUIREMENTS

The Contractor shall perform a pre-blast survey of the areas where blasting is required and shall record existing conditions in written form, sketches, photographs, video tape, or any other form. All nearby buildings, foundations, driveways, roadways, and other existing structures shall be inspected for cracks, loose masonry, and any other condition which might be attributable to blasting at a later date. The pre-blast survey shall be

reviewed by a licensed Professional Engineer and a copy shall be provided to the Town Public Works Department.

Damages and costs of whatever nature resulting from the blasting work shall be borne solely by the Contractor.

1.4 PROTECTION AND REPAIR OF EXISTING UTILITIES

The Contractor shall notify Dig-Safe (1-888-344-7233) prior to any excavation in the public Right-of-Way or utility easement limits, except in the case of emergencies. In emergency situations, the Contractor shall notify the Public Works Department during regular office hours (8:00 a.m. to 4:30 p.m.). In addition, the Public Works Department shall be contacted **seventy-two (72) hours** prior to any scheduled work within the limits of the public Right-of-Way. Whenever culverts, sewers, drains, manholes, catch basin connections, water mains, electric conduits, telephone conduits, utility poles, overhead lines or other existing facilities are encountered, they shall be protected and firmly supported by the Contractor at his/her own expense, by methods approved by the Design/Project Engineer. Until excavation is backfilled and the existing structures are made secure, injury to any such structures caused by or resulting from the Contractor's operations, shall be repaired at the Contractor's expense within a time period that will not place an unreasonable burden on the users. The authority having charge of any particular underground structure shall be notified promptly of injury to its structure.

Pipes or other underground structures encountered in excavating or trenching shall be permanently supported by methods acceptable to the Public Works Department for municipal utilities and the utility owner.

1.5 INSTALLATION OF NEW UTILITIES

All new site plans and subdivisions are required to have all utilities (i.e. power, telephone, TV) below ground, including street crossings.

1.6 RECONSTRUCTION OF EXISTING UTILITIES

In no case shall the Developer/Contractor move, change or repair any water main, sewer main, electric conduit, telephone conduit, utility pole, anchor, or any underground cables, conduits or structures without permission of the Public Works Director and the utility owner, and until they are satisfied that adequate warning to the users has been provided. The Developer shall be responsible for the work and for providing notice to users before interrupting service. Unless specifically provided for by written agreement, reconstruction, both overhead and underground, of the utilities shall be at the Developer/Contractor's expense.

1.7 PERMITS

It shall be the Contractor's responsibility to obtain all federal, state, local or utility company permits necessary for the construction of the project prior to initiation of construction. The Contractor is also responsible for maintaining these permits in force during the length of the contract and for taking all required actions to comply with the content of the permits. All permits shall be readily available on site at all times.

1.8 WORK OUTSIDE PROPERTY LIMITS OR WITHIN PUBLIC RIGHTS-OF-WAY

The Contractor shall not (without written consent of the property owner in the form of an easement) enter or occupy with persons, tools, materials, or equipment any private land, other than their own. In a similar manner, no excavation shall take place within the public right-of-way, including but not limited to curb cuts and access to projects or properties, without first obtaining written authorization from the Town or State, as applicable.

All easements shall require title searches and certification by an attorney. Easements need to be accepted by the Town Public Works Department prior to issuance of any Town permit.

1.9 STANDARDS FOR PAVEMENT CUT

Refer to the Town's ordinance entitled *Regulation of the Placement of Utility Lines Within Public Road Rights-of-Way and Public Property*.

Backfill will be compacted in 6" lifts to 95% dry density (Standard Proctor). The top 12" minimum subbase will be of crusher run gravel or dense graded stone.

All Contractors performing road cuts will provide proper road signs and traffic control if in Town Right-of-Way.

Asphalt, curbing, topsoil, etc. will be completed within at least fifteen (15) days after cut has been made, or at the discretion of the Public Works Director.

1.10 SUPERVISORS ON THE JOB SITE

The Contractor shall be responsible for ensuring that there is a supervisor or responsible individual with the authority to make decisions for the Contractor under his/her direct employ on the job site at all times that construction is underway, whether or not the construction is being accomplished by a subcontractor hired by a general contractor.

1.11 CONSTRUCTION/WARNING SIGNS

Construction approach signs, as required, shall appear at each end of a public highway under construction and on all intersecting public highways. The exact placement of any sign will depend upon the alignment of the highway and the character of the roadside. The location, measurements, and minimum spacing shall comply with Section E of the State of Vermont Agency of Transportation Design Standards for Road and Bridge Construction, latest edition.

The design of the signs shall conform to the standards prescribed in the Manual on Uniform Traffic Control Devices (MUTCD), latest edition.

The signs shall be of metal, wood, plywood, hardboard, or any other material satisfactory to the Public Works Director. No material shall be accepted that will deteriorate by exposure to the weather during the required life of the sign.

The signs shall be in place at the time the project officially commences. Each sign shall be erected in a neat and workmanlike manner and shall be maintained by the Contractor.

1.12 MAINTENANCE AND PROTECTION OF TRAFFIC

The Contractor shall provide uniformed traffic police or certified flag persons if deemed necessary by the Town. Only uniformed traffic police shall direct traffic at signalized intersections and the cost of uniformed traffic police services shall be paid for by the Contractor.

The Contractor shall, as conditions warrant, employ certified flag persons at any location on the project where his/her equipment or construction operations are such that they will in any manner interfere with the movement or safety of the traveling public within the public right-of-way.

The Contractor shall notify the Public Works Director, Police, and Fire Departments at least **forty-eight (48) hours** in advance of any need to close streets. Closing streets shall only be done as a last resort. The Contractor shall work with the Town to establish a suitable alternate route, and shall at his/her own expense, provide and maintain suitable marked and well-lit detour signs.

The employment or presence of certified traffic flag persons or uniformed police does not relieve the Contractor of responsibility or liability.

1.13 TESTING AND INSPECTION REQUIREMENTS

1.13.1 General

Proper construction requires field verification of materials and technique. All materials shall have submittals sent to the Public Works Department by the Design/Project Engineer and shall be accepted by the Public Works Department prior to being installed. All projects require either periodic or full-time inspection by the Design/Project Engineer, or a qualified engineer experienced in the area of construction to be undertaken that is under the supervision of the Design/Project Engineer. Tests and results are required to be completed and filed with the Public Works Department on a timely basis. Upon completion of the construction, the Design/Project Engineer shall certify that required testing and inspection has been conducted and the project is in conformance with the accepted plans. The certification is required prior to final acceptance of the project by the Town, or the issuance of a Certificate of Completion.

The inspection schedule will be tailored for each individual project and set at the pre-construction meeting as applicable.

A final walk-through inspection of the project by the Design/Project Engineer and a representative from the Public Works Department shall be required.

When a final walk-through inspection is complete, all deficiencies corrected, record drawings accepted, and the project certification received, the Town will accept the construction and a warranty period of three (3) years will begin.

1.13.2 Sanitary Sewer Systems

A minimum **one (1) day** notice shall be given to the Public Works Department so inspection of all materials can take place on the site before any work begins, and before testing of the pipelines and manholes.

The following sanitary sewer system general checklist will be used at final inspection:

- Manholes, pipelines, and appurtenances clean;
- Inverts and shelves with smooth transitions;
- Manhole frames and covers set at proper elevation;
- General appearance;
- Material testing results, lab reports, manufacturer’s product sheets;
- Certificates, pressure and leakage tests, lamping and deflection tests, and pump test results are complete and on file;
- Tie-record information and record drawings are complete and on file.

1.13.3 Water Distribution Systems

A minimum **one (1) day** notice shall be given to the Public Works Department so inspection of all materials can take place on the site before construction begins, and before any connections are made to the existing water system and before testing, flushing, disinfecting, and sampling of new mains.

The Public Works Department shall be present when any connection to the existing water system is made and during the testing, flushing, disinfecting, and sampling of new mains.

The following water main general checklist will be used at final inspection:

- Valves, hydrants, and curb stops are accessible and operating properly;
- Valve box covers and curb stops set at proper elevations;
- General appearance;
- Material testing results, lab reports, manufacturer's product sheets;
- Certificates, pressure and leakage tests, and disinfection/bacteriological test results are complete and on file;
- Tie-record information and record drawings are complete and on file.

1.13.4 Storm Drainage Systems

A minimum **one (1) day** notice shall be given to the Public Works Department so inspection of all materials can take place on the site before construction begins.

The Public Works Department shall inspect all storm drain, culvert joints, connections to catch basins, catch basins, and other storm drainage facilities, such as detention basins and ponds.

All storm drainage facilities will be inspected upon completion of the project using the following general checklist:

- Catch basins, manholes, and pipelines clean;
- Ditches and outlets clean;
- Erosion control measures completed;
- General appearance;
- Leakage test results are complete and on file;
- Tie-record information and record drawings are complete and on file.

1.13.5 Highways

A minimum **one (1) day** notice for all inspections will be given to the Public Works Department so inspection of all materials can take place on the site before

construction begins.

Samples of all subbase and base materials will be tested by a lab acceptable to the Town in accordance with Section 5, at the Developer's expense. The responsibility for all testing shall be the Developer's. The material compaction will be performed by AASHTO-T-99, Method C (Standard Proctor) test in fill sections at minimum intervals of every 250 feet in length and 2 feet in depth and changes in material.

In addition to the compaction testing, a fully loaded, dual wheeled dump truck with a total weight not less than twenty-four (24) tons shall be driven over the compacted roadway subgrade and the depression left by the truck wheels shall be reviewed by the Design/Project Engineer and the Public Works Director to make a judgment on the acceptability or unacceptability of the roadway subgrade.

The Public Works Department will be notified in advance to inspect the construction of any and all roads at the following phases of construction:

- Preparation of subgrade;
- Placement and compaction of subbase and base material;
- Completion of finish grading;
- During the placement of the base course of asphalt;
- During and after the placement of the top course of asphalt.

The Public Works Department will inspect work during the placement of underground utilities, curbs, sidewalks, and driveway aprons.

A final inspection will be made after the completion of all roads, curbs, driveways, sidewalks, bicycle paths, and setting of all pins and monuments for lots and street rights-of-way. The following roadway general checklist will be used at final inspection:

- Settlement, depression, or imperfections in finish surface;
- Seeding and erosion control on cut and fill slopes;
- Surface drainage (during rainstorm);
- General appearance;
- Materials testing results and lab reports are complete and on file;
- Tie-record information and record drawings are complete and on file.

1.14 PROJECT ESCROW ACCOUNT

All of the public works improvements to be dedicated to the Town of Williston are to be guaranteed through an escrow account provided to the Town at no cost and in

coordination with any development agreement under the Williston Development Review Board. The escrow account shall be in an amount sufficient to cover the total estimated costs of the improvements as accepted by the Public Works Director. The escrow account shall be conditioned upon the satisfactory condition of the improvements for a period of three (3) years, from the date of final acceptance by the Town.

Prior to establishment of a satisfactory dollar value for the escrow account, the Developer shall submit an accurate construction cost estimate on the form supplied by the Public Works Department. The completed document shall be submitted to the Public Works Director for review and acceptance prior to posting of a bond or escrow account.

Releases to the escrow account will be made based on satisfactory progress, but no more than one release per month will be allowed because of processing requirements.

New development agreements are written with a fifteen (15) month construction period. Following Town acceptance of final construction there is a three (3) year guarantee period with a ten (10) percent retainage. .

Projects are generally split into phases with approval from the DRB for each phase. To avoid conflicts over reductions in payment and questions over responsibility for winter maintenance during construction, the following procedure is established:

- The Town will provide winter snow removal and maintenance services during the first winter of the highway construction phase only if prior acceptance is given and if the base course of asphalt has been constructed and Snow Plow Agreement has been accepted. If only the subbase gravel course has been constructed, the Developer/Contractor shall be responsible for plowing and salting/sanding on all unpaved streets. Building permits should generally not be requested for streets which cannot have a base course of asphalt on them prior to winter. See Section 5.4.2, page 5 – 7.

- It is recommended that the top course of asphalt not be laid during the first construction season as construction settlement or frost damage historically shows up the following spring. By postponing the top course, corrections can be made at less cost to the Developer. It should be noted however, heavy truck traffic may damage the base course pavement prior to paving the top course. To alleviate this problem, the base course shall be a minimum 2-½" thick if allowed to sit the winter or construction equipment should be kept off the paved base course until the top course is applied and has been accepted by the Public Works Department.

- The Owner/Developer of the roadway shall secure an Owner's policy of title insurance in favor of the Town of Williston.

- Partial releases of the bond for water distribution, sanitary sewers, and storm drainage will only be made for those continuous sections which pass all required tests.

1.15 PRE-CONSTRUCTION MEETING

Pre-construction meetings are required for all proposed public improvements to be accepted by the Town.

Before a pre-construction meeting can be held, the Developer must provide the Public Works Department with the following information:

- Proposed or Executed Right of Way Permit;
- All deeds and/or easements;
- Cost estimate for construction;
- Evidence that all requirements and conditions imposed by the Development Review Board and Select Board have been met;
- Two (2)copies of all accepted plans and specifications;
- Evidence that the required Mylar depicting all lots, Rights-of-Way and easements has been filed.

Following receipt, review, and acceptance of the required documentation, the Town will schedule a pre-construction meeting. In attendance will be:

- Developer;
- Design/Project Engineer;
- Contractor;
- Public Works Department Officials;
- Planning Department Officials.

The meeting will consist of exchanging information between the Developer/Owner, Contractor, Design/Project Engineer, and the Town. Specifically, the Developer should be prepared to discuss:

- Project phasing and timing;
- Utilities connection/extension;
- Construction schedules;
- Anticipated paving schedule and plans for winter treatment of roads;
- Erosion and dust control measures and maintenance;
- Haul routes;
- Project supervision;
- Provide the Town with an emergency contact list including the key people involved in

the project, condensed onto one (1) sheet.

The Town will discuss and review specific portions of the Public Works Standards and Specifications, including the Right of Way Permit, utility testing, service connection procedures, water meter installations, road preparation, and other related items.

1.16 ACCEPTANCE OF ROADWAY

The following shall occur where a roadway is to be irrevocably offered by way of dedication to the Town:

- The survey map depicting the roadway shall be completed by a licensed surveyor and recorded with the Town.
- All pins/concrete markers/other monumentation in and along the roadway must be installed before acceptance of the roadway and no later than the date of the offer of dedication.
- The owner of the roadway shall secure an owner's policy of title insurance in favor of the Town of Williston.
- Counsel for the owner of the roadway shall certify that all permits and all acceptances for construction of the road have been secured and that the roadway and any water, storm, or sewer lines situated within the roadway have been constructed in accordance with such permits/acceptances.
- The Warranty Deed transferring the roadway to the Town shall contain a metes and bounds description of the roadway and reference to the recorded survey map.
- The Developer shall pay the reasonable costs of the Town in reviewing the instruments of transfer and compliance with the foregoing conditions.

1.17 ENGINEERING SERVICES DURING AND AT THE END OF CONSTRUCTION

The Developer is required to have the Design/Project Engineer inspect the project during construction for the purpose of providing verification of tests and also to verify that the project was constructed in conformance with the accepted plans.

1.18 TOWN ENGINEER FEES

Town Engineer fees shall be assessed to all proposed development in the Town of Williston per the following schedule, and per the "Engineering Fee Application" available at the Public Works Department. Said fees will be determined after pre-application acceptance and prior to the scheduling of the discretionary hearing.

Table 1.1
Town Engineering Service Charges
Residential/Industrial/Commercial Developments

Lots/Units	**Estimated Charge**
1 – 9 Lots/Units	$2,500
10 – 50 Lots/Units	$5,000
50 – 80 Lots/Units	$8,000
Over 80 Lots/Units	$10,000

Notes:

1. These engineering service charges are initial budget ESTIMATES. Actual costs will be based on actual hours expended by the Engineer.
2. The required effort on each project is variable and dependent upon: a) conformance of design to Town standards; b) conformance of Contractor to the design plans and specifications; c) quality of construction, need for re-inspections; and d) quality of Contractor's work. The above allowances should cover most of the engineering efforts for traditional development.
3. Developments that are not the traditional type, i.e. large shopping malls, etc. will be provided individual cost estimates at the time of application submittal, upon request.

1.19 TOWN ATTORNEY FEES

Town attorney fees shall be assessed at prevailing rates to all proposed development in the Town of Williston. The Town attorney assists the Town in reviewing the instruments of transfer and compliance with the requirements where easement(s) and/or roadway is to be irrevocably offered by dedication to the Town.

1.20 SUBMITTAL OF AS-BUILT DRAWINGS

A Certificate of Compliance will not be issued for any portion of a project involving an extension of utilities or a road until all testing/inspection certifications have been submitted and an initial set of record drawings have been accepted by the Town.

Record drawings should include the following information:

1.20.1 Sanitary Sewers

- Accurate locations, depths, pipe materials, sizes, and slopes, of all sanitary sewer lines, sewer service lines at the Right-of-Way, building connections, cleanouts, and manholes including rim elevations, invert elevations and distances between manholes.

- Results of leakage tests on all pipelines and manholes.
- Results of deflection and lamping tests.
- Results of sewerline video, if available.
- Documentation of three (3) distance tie measurements for each structure.

1.20.2 Water Distribution

- Accurate locations of all water lines, valves, and appurtenances.
- Accurate measurements and depths to all valves, tees, bends, curb stops, and any other fittings from permanent fixtures such as telephone poles, hydrants, buildings, transformers, etc.
- All curb boxes shall be marked with stakes so they can be easily located before building services are connected.
- Results of hydrostatic, leakage, and disinfection tests on all pipelines.
- Documentation of three (3) distance tie measurements for each structure.

1.20.3 Storm Drains

- Depth, size, location, and type of all storm drain lines and culverts, including underdrains and services along with elevations.
- Location of all catch basins.
- Location and details for all storm drainage facilities, such as detention ponds.
- Location of all drainage ways, water courses, etc.
- Location and width of drainage easements.
- Results of pipeline video, if available.

1.20.4 Highways

- Accurate locations of all streets, culverts, and other facilities.
- For streets, the following information shall be shown:
  - Width of pavement from curb to curb or shoulder to shoulder;

- Right-of-way dimensions for streets;
- Width of sidewalks, bike paths and easements;
- Location of street lights;
- Location of driveways;
- Location and size of planter islands, if any
- Typical cross-section of streets as installed with date of completed construction;
- Location of all underground electric, gas, telephone lines, and crossing sleeves.

$ Results of all sieve analyses, compaction, and bituminous pavement tests.

1.20.5 Record Drawings

Record drawings are required for both subdivision and site development in the Town of Williston. Record drawings shall include all items as defined on the Town's As-built Check List.

1.20.6 Final Drawings

After review of final drawings by the Public Works Department, a final set of record drawings, including two (2) sets of prints, and all drawings on cd in AutoCAD format, shall be submitted to the Town within sixty (60) days of the completion of a project and shall be stamped by the Design/Project Engineer. The record drawings shall also contain a stamped and signed statement by a licensed land surveyor that all property corner markers and roadway monuments have been set in accordance with the accepted property plat.

SECTION 2

SANITARY SEWER SYSTEMS

SECTION 2 SANITARY SEWER SYSTEMS

2.1 GENERAL

It is not intended by the Town of Williston that this "Section" be a complete set of specifications. It is to be used as a basic standard for any person planning to work in the Town sanitary sewer system. All items included shall be acceptable to the Public Works Department and any items not listed will require acceptance by the Public Works Director before installation. Failure to receive Town acceptance of the materials and methods prior to their incorporation into the system shall leave the person having the said work done liable for the replacement of those substandard materials with acceptable materials at his/her expense.

The person(s) proposing extensions or alterations to the existing sanitary sewer system shall be responsible for complying with all applicable rules, regulations, and ordinances (local, state, federal). Said persons shall submit all necessary documentation, including but not limited to, plans, details and drawings, specifications, permits and applications, and shall have obtained all acceptances and paid all applicable fees.

All new sanitary sewer lines will be subject to the current Sewer Use Ordinance and any amendments thereto.

The Developer shall hire at his/her expense the Design/Project Engineer who shall be on site during construction to see that sanitary sewer line construction is completed according to specifications. No pipe shall be covered unless approved by the Design/Project Engineer. All pipelines and manholes shall be tested by an accepted method and to the standards of the industry. Upon completion of work and before any portion of the sanitary sewer is used, the Design/Project Engineer shall submit to the Town a certification report stating that the system has been installed in conformance with the accepted plans and appropriate tests have been passed. Copies of all tests and test results shall be submitted to the Public Works Director.

All gravity sewer systems shall be designed within an existing Town Highway, State Right-of-Way, or a proposed Highway Right-of-Way. Sewer pump stations and force mains will not be accepted by the Town, nor will costs of operation, maintenance, or replacement be borne by the Town, with the following exceptions considered:

- A municipal property connection.
- A pump station with more than 200 individual metered units contributing.

2.2 MATERIALS

2.2.1 Manholes

Pre-cast reinforced concrete manholes shall conform to ASTM specifications C478 (latest edition). Concrete shall be Class A, 4000 psi reinforced to ASTM specifications at 0.12 square inch per linear foot with #4 reinforcing bars. The base shall be monolithic and all sections and joints shall be sealed with bitumastic double seal. All precast sections shall be indelibly marked on the inside with the date of manufacture and the manufacturer's name or trademark.

Manholes shall be capable of handling an 8 ton (H-20) loading without failing.

Cut outs for pipe entries shall be provided and will be sealed with lock-joint flexible manhole sleeve, Kor-N-Seal joint sleeve or accepted equal.

Manhole steps shall be copolymer polypropylene plastic manhole steps: PS2-PF-SL by M.A. Industries, Inc. and shall be placed vertically 12" center to center. Steps shall be a minimum of 10" wide, plus foot stop, and shall be imbedded to meet load requirements of 300# applied point loading at maximum stress and pull out of 2500# applied at center of rung.

Manhole frames and covers shall be 26" in diameter as manufactured by LeBaron No. LC266 or accepted equal, and shall have the word "sewer" cast into the cover. They shall be of uniform quality, free from blowholes, porosity, hard spots, shrinkage distortion or other defects, shall be smooth and well cleaned by shot-blasting. Materials used in the manufacture of casting shall conform to ASTM A48, Class 30, or better for gray iron, or ASTM A536 for ductile iron.

If manhole is located in an area subject to severe runoff or flooding, a watertight cover and frame by LeBaron No. LBB268-3 or accepted equal shall be used.

Prior to repaving roadways, steel extension rings shall be installed as necessary in order to maintain the frame and cover at grade. ASTM 36 Hot Rolled Steel shall be used.

2.2.2 Pipe

- PVC (Polyvinyl Chloride)
  Sewer pipe shall conform in all respects to the latest revision of ASTM specifications D-3034, Type PSM, Polyvinyl Chloride (PVC) Sewer Pipe and Fittings, SDR 35. Wall thickness of all PVC pipe shall meet ASTM specifications for SDR 35 pipe. All pipe and fittings shall be clearly marked as follows:

- Manufacturer's name and trademark;
- Nominal pipe size;
- Material designation 12454C PVC;
- Designation ASTM D-3034 or F679.

Joints shall be push-on type using elastomeric gaskets and shall conform to ASTM D-3212. The gaskets shall be factory installed.

Any pipe or fitting having a crack or other defect or which has received a severe blow, shall be marked "rejected" and removed at once from the work site.

2.2.3 Service Connections

For new installations, all service connections shall utilize manufactured PVC SDR 35 gravity sewer fittings. PVC service wyes shall be installed for each new 6" service connection and the materials shall be constructed in accordance with ASTM D-3034. Field fabricated, saddle type connections are not acceptable for connection to new or existing sewer mains.

2.2.4 Wastewater Pump Stations

All pump stations shall be designed and constructed in accordance with the State of Vermont Environmental Protection Rules (EPR), latest edition, and shall include the following appurtenances as a minimum:

- Battery operated klaxon audio alarm. Autodialer with 8 channels with alarm light;
- Elapsed time meters for each pump;
- Alternating switch selector;
- Seal failure indicator light;
- Main power disconnect;
- Lightning protection;
- Emergency power connector compatible with the Town generator;
- Pressure transducer level control system with backup floats;
- Junction box in manhole for pump disconnection;
- Heater with thermostat;
- Run light;
- Transfer switch in control panel;
- Explosion proof lighting fixtures and <u>15 amp 120 VAC</u> convenience outlet;
- Pump by-pass capability;
- Provisions for odor control, if needed;

- Wet well mechanical ventilator;
- Trash basket or rack;
- Platform with grating;
- Maintenance contract;
- Complete operation and maintenance manual;
- Maintenance contact person.

New pump stations serving more than 200 connections or serving a municipal property are subject to acceptance by the Town and shall be constructed with a separate wet well and dry well, as a minimum. Controls shall be located above grade and all control, alarm, and telemetry equipment shall be identical to the Town's existing lift station control systems.

2.3 INSTALLATION

2.3.1 PVC Pipe

All field cuts are to be made at a ninety (90) degree angle. The cut end shall be beveled to the same as the factory bevel and all interior burrs shall be removed. A homing mark shall be placed on the pipe before assembling. The pipe installed under this specification shall be installed so that the initial deflection is less than five (5) percent.

PVC pipe shall not be installed when the temperature drops below 32 degrees Fahrenheit or goes above 100 degrees Fahrenheit without prior Public Works Department acceptance. During cold weather, the flexibility and impact resistance of PVC pipe is reduced. Extra care is required when handling PVC pipe during cold weather conditions.

PVC pipe shall not be exposed to prolonged periods of sunlight, as pipe discoloration and reduction in pipe impact strength will occur. Canvas or other opaque material shall be used to cover PVC pipe stored on site.

2.3.2 Pipe Bedding

For PVC and ductile iron gravity sewers, the bedding material shall consist of ¾" crushed stone, V.A.O.T. item 704.02B. The bedding material shall extend from the trench bottom at 6" below the pipe invert to the top of the pipe.

2.4 TESTING PROCEDURES

Sanitary sewers and structures shall be tested for soundness, deflection, and tightness as follows:

2.4.1 Low Pressure Air Test

The low pressure air test shall conform to the requirements and procedures set forth as follows:

1. Test is to be conducted between two (2) consecutive manholes, as directed by the Design/Project Engineer.
2. The test section of the sewer line is plugged at each end. One of the plugs must be tapped and equipped for the air inlet connection for filling the pipeline from the air compressor.
3. All service laterals, stubs, and fittings into the sewer test section should be properly capped or plugged and carefully braced against the internal pressure to prevent air leakage by slipping and blowouts.
4. Connect air hose to tapped plug selected for the air inlet and then connect the other end of the air hose to the portable air control equipment in which to monitor the air entry rate to sewer test section and the air pressure in the pipeline.
5. The air control equipment includes a shut-off-valve, pressure regulating valve, pressure reduction valve, and a monitoring pressure gage having a pressure reduction valve, and a monitoring pressure gage having a pressure range from 0 to 5 psi. The gage should have minimum divisions of .10 psi and an accuracy of +.04 psi.
6. Connect another air hose between the air compressor (or other source of compressed air) and the air control equipment. This completes the test equipment set up. Test operations may commence.
7. When a constant pressure of 4.0 psig is reached, throttle air supply to maintain the internal pressure above 3.5 psig for at least five (5) minutes. This time permits the temperature of the entering air to equalize with the temperature of the pipe wall. During this stabilization period, it is advisable to check all capped and plugged fittings with a soap solution to detect any leakage at these connections.
8. If leakage is detected at any cap or plug, release the pressure in the line and tighten all leaky caps and plugs. Then start the test operation again by supplying air. When it is necessary to belled off the air to tighten or repair a faulty plug a new five (5) minute interval must be allowed after the pipe line has been refilled.
9. After the stabilization period, adjust the air pressure to 3.5 psig and shut off or disconnect the air supply. At 3.5 psig commence timing with a stop watch until the line pressure drops to 2.5 psig. The time required for a pressure loss of 1.0 psig is used to compute the air loss. Most authorities consider it unnecessary to determine the air temperature inside the pipe line and the barometric pressure at the time of the test.
10. If the time, in minutes and seconds, for the air pressure to drop from 3.5 to 2.5 psig is greater than that shown in the table for the designated pipe size, the

section undergoing the test shall have passed and shall be presumed to be free of defects. The test may be discontinued at that time.

11. If the time, in minutes and seconds, for 1.0 psig drop is less than that shown in the table below for the designated pipe size, the section of pipe shall not have passed the test; therefore, adequate repairs must be made and the line retested.

Table 2.1
Low Pressure Air Test – Time Table

Pipe Diameter	Time
6”	4 min 00 sec
8”	5 min 00 sec
10”	6 min 30 sec
12”	7 min 30 sec
15”	9 min 30 sec
18”	11 min 30 sec

Notes:

1. An air pressure correction is required when the prevailing ground water is above the sewer line being tested. Under this condition, the air test pressure must be increased .433 psi for each foot the ground water level is above the invert of the pipe.
2. If the section does not pass the leakage tests, the Contractor shall do everything necessary to locate, uncover, and repair or replace the defective pipe, fitting, or joint, all at his/her own expense and without extension for completion of work. Additional tests and repairs shall be made until the section passes the specified test.
3. No more than 1,000 feet of sewer shall be constructed initially without testing. After the initial test, the frequency of testing shall be as determined by the Design/Project Engineer.

2.4.2 Deflection Test

This test is applicable in sections in which plastic pipe (PVC) has been installed. Requirements and procedures as recommended by the manufacturer and as detailed below shall be followed for the specific pipe material used.

Deflection testing of PVC pipe (flexible) shall conform to the requirements and procedures set forth by the manufacturer but as directed by the Design/Project Engineer. Testing shall take place on all lines designated by the engineer only after the final backfill has been in place at least thirty (30) days. The test shall be conducted using a rigid ball or mandrel having a diameter 92.5% of the pipe. This “go-no go” deflection testing equipment shall be pulled through the pipe without the use of mechanical pulling devices.

All sewer lines shall be lamped by a licensed Professional Engineer as witnessed by the Public Works Department. The maximum limits of vertical deflection for PVC pipe (flexible) shall be 7.5%. In any area where the deflections exceed 7.5% (i.e. the mandrel will not successfully pass and the lamping test fails), the trench shall be re-excavated, and the pipe zone backfill and embedment shall be removed and replaced in accordance with the original specifications. If, in the opinion of the Project Engineer and/or the Public Works Department, the pipe has been damaged, the pipe shall be removed and replaced with new pipe and installed in full accordance with the specifications.

2.4.3 Force Main Hydrostatic and Leakage Test

After a force main has been completed, the pipe shall be subjected to a hydrostatic and leakage test in accordance with AWWA C600 (latest edition). The test pressure shall be a minimum of 150 pounds per square inch at the highest point along the test section for a minimum two (2) hour duration.

2.4.4 Manhole Vacuum Test

After each manhole has been set in place (**but before backfilling**), all inlet and outlet pipes connected, joints and openings sealed and otherwise ready to be backfilled, the Contractor shall perform a vacuum test of each manhole in the presence of the licensed Design/Project Engineer as follows:

1. Set the testing equipment on the top section of the manhole and inflate the compression band to affect a seal between the structure and the vacuum base.
2. Connect the vacuum pump to the outlet port, open the valve, and draw a vacuum of 10” Hg. (Mercury).
3. Close the valve and monitor the vacuum page.
4. The manhole shall pass this test if the vacuum holds at 10” Hg. or drops no lower than 9” Hg. within the following times shown on Table 2.2.

Table 2.2
Manhole Vacuum Test

Manhole Depth	Time
0’ – 10’	2 min 00 sec
10’ – 15’	2 min 30 sec
15’ – 20’	3 min 00 sec

5. If the vacuum drop exceeds 1” Hg. during the specified time periods, the manhole shall be resealed and steps 1 through 4 above shall be repeated until the vacuum holds for the specified time.
6. After the manhole passes the vacuum test, it shall be backfilled carefully so that no leaks are created. If the manhole is disturbed in any way during backfill, it shall again be vacuum tested according to steps 1 through 4 above.
7. The Contractor shall provide the Design/Project Engineer with a written log of each manhole leakage test result.

SECTION 3

WATER DISTRIBUTION SYSTEMS

SECTION 3 WATER DISTRIBUTION SYSTEMS

3.1 GENERAL

It is not intended by the Town of Williston that this “Section” be a complete set of specifications. It is to be used as a basic standard for any person planning to work in the Town water distribution system. All materials listed shall be acceptable to the Town Public Works Department and any materials not listed will require acceptance by the Town Public Works Department before installation. Failure to receive acceptance of materials prior to their incorporation into the system shall leave the person having the work done liable to replace of those substandard materials with acceptable materials at his/her cost.

The applicant(s) proposing extensions or alterations to the existing water system shall be responsible for complying with all applicable rules, regulations, and ordinances (local, state and federal). Applicants shall submit all necessary documentation, including but not limited to, plans, details and drawings, specifications, and permits and shall have obtained all acceptances and paid all applicable fees.

Water mains and their related appurtenances shall be eligible for acceptance as part of the Town water system when the following criteria have been complied with:

- The installation and materials have been accepted by the Public Works Director.
- The installation has passed the necessary hydrostatic pressure and leakage tests in accordance with the latest revisions of AWWA C-600.
- The installation has been disinfected in accordance with the latest revision of AWWA C-651 and has been certified by the Vermont Department of Health or other Town-accepted testing facility to be free of bacteriological contamination.
- No new main shall be placed in service until it has met the above requirements.
- The installation must be within an existing Town highway Right-of-Way or within a proposed highway Right-of-Way that is deeded to the Town.
- The Public Works Department has been furnished two (2) sets of Record Drawings. All Record Drawings shall be 24” x 36” in size and drawn to a 1” = 50” or less scale. All Record Drawings shall be provided to the Town on disk in AutoCAD format.
- After a minimum of three (3) years from the date that the new installation was placed in service, it may be deeded to the Town of Williston and become a part of its distribution system and by such acceptance, the Town of Williston shall be responsible for the maintenance of it. However, it should be clearly understood that prior to acceptance into the distribution system, full responsibility for the maintenance and repair of the new main and its related appurtenances shall rest with the Owner.

3.2 MATERIALS

3.2.1 Ductile Iron Pipe

Pipe shall conform to current AWWA/ANSI – C151/A21.51 Standards. Push-on joint pipe shall be thickness Class 52.

Push-on joint accessories shall conform to applicable requirements of AWWA/ANSI – C111/A21.11.

Pipe shall be cement mortar lined on the inside in accordance with AWWA/ANSI – C104/A21.4 Standard except that the cement lining thickness shall not be less than 3/16“. A plus tolerance of 1/8” will be permitted.

Pipe shall be given an exterior bituminous coating of coal tar or asphalt base in accordance with Specification ANSI A21.51.

All ductile iron pipe shall be polyethylene encased in accordance with ANSI A21.5.

3.2.2 Fittings

Ductile iron fittings shall conform to AWWA/ANSI C104/A21.4, Class 350 working pressure.

Bolts and nuts shall conform to AWWA/ANSI – C111/A21.11 and shall be Type 18-8 stainless steel.

3.2.3 Anchor Tees and Anchor Couplings

Anchor tees shall be a standard mechanical joint tee except that the branch is plain end with an integral retaining ring and split gland. Tee will be Class 350 ductile iron, cement lined, conforming to AWWA Standards C110 (latest version), C111 (latest version), and C104 (latest version).

3.2.4 Gate Valves

Gate valves shall be manufactured to meet all requirements of AWWA C509 (latest version). Valves shall have non-rising stems, open counterclockwise, and shall be provided with a 2” square operating nut with arrow cast in metal to indicate direction of opening. Each valve shall have maker’s name, pressure rating and year in which manufactured cast on the body. Prior to shipment from the factory, each valve shall be tested by hydrostatic pressure equal to twice the specified working pressure.

3.2.5 Tapping Valves and Tapping Sleeves

Tapping valves shall conform to AWWA C-509 Standard for Gate Valves, 3" through 48" for water and other liquids, except as modified herein. Valve body and bonnet shall be fusion banded epoxy coated per AWWA C-550. Valves shall open counterclockwise and shall have a minimum working pressure of 150 psi. End connections shall be mechanical joint by tapping for bolting of the valve to the branch outlet.

Tapping sleeves shall be of the split sleeve design constructed with two solid half-sleeves bolted together. Sleeves shall be constructed of cast iron and shall have a working pressure of 150 psi. with mechanical joint ends and side gasket seals.

All exterior nuts and bolts used with the tapping sleeve and valve shall be Type 18-8 stainless steel.

Buried tapping valves shall be provided with a 2" square wrench nut and shall be installed with a valve box as required in these specifications for buried valves.

Tapping valves and sleeves shall be Clow or accepted equal.

3.2.6 Valve Boxes

Cast-iron two (2) or three (3) piece slide type; 5 ¼" shaft; 6' trench depth.

Cast-iron cover shall be marked "WATER" and shall indicate direction of opening.

3.2.7 Air Release Valves

Valves shall have stainless steel or bronze trim. A brass gate valve shall be provided in the connecting piping ahead of the valve. Valves shall be manufactured by APCO or accepted equal. Orifice shall be 3/16" and valve, isolating valve, and connection piping shall be 1" unless otherwise specified.

3.2.8 Pipeline Couplings

Pipeline couplings shall conform to AWWA Standards C110 (latest version) and ANSI A21.10 (latest version) and shall be installed in accordance with the manufacturer's recommendation and at locations directed by the Engineer.

All nuts and bolts used with pipeline couplings shall be Type 18-8 stainless steel.

3.2.9 Fire Hydrants and Branch Connections

Fire hydrants shall be Mueller Super Centurion 200 or Kennedy Guardian K-81D, with the following specifications:

Main Valve Opening:	5-¼" or equal
Nozzle Arrangement: Standard	Two 2-½" hose nozzles with National thread. One 4-½" pumper nozzle with National Standard thread
Inlet Connection:	6" mechanical joint
Operating Nut:	Standard 1" Pentagon
Color:	Enameled hydrant red
Depth of Bury:	Hydrant shall be installed to the manufacturer's instructions with nozzles about 18" above finish grade
Drain Plugs:	Shall be plugged

Hydrant assemblies shall consist of an anchor tee off the main, a 6" mechanical joint valve conforming to these specifications and the appropriate length of 6" ductile iron cement lined Class 52 pipe, anchor coupling, and hydrant. The use of restrained mechanical joint fittings and rods are preferred to concrete thrusting for hydrants.

3.2.10 Services

Taps on ductile iron watermains shall be direct tapped. Taps on other mains shall require a bronze saddle and straps or a ductile iron nylon coated saddle with stainless steel single strap. All service brass shall be in accordance with AWWA Specification C-800.

All plumbing pipes, fixtures and fittings used to convey or dispense water for human consumption shall comply with the State of Vermont Act 193 requirements for maximum lead content.

Service lines ¾" to 2" shall be Type K copper tubing and larger than 2" shall be ductile iron pipe.

Corporation stops shall be manufactured by Mueller or accepted equal.

Curb stops shall be manufactured by Mueller or accepted equal.

Curb boxes and stops shall not be constructed beneath drives or sidewalks.

Curb boxes shall be Erie type with stainless steel pins and a stainless steel operating rod connected to the curb stop and the box consisting of an arch pattern base and an adjustable upper section. Curb boxes shall be Mueller H-10314 or accepted equal.

3.3 INSTALLATION

Push-on joint pipe shall be laid with bell ends facing upstream and in accordance with the manufacturer's instructions. A thin film of lubricant supplied by the pipe manufacturer shall be used to facilitate joint assembly.

Laying pipe and fittings shall be in accordance with the requirements of AWWA *Standard Specifications for Installation of Gray and Ductile Cast-Iron Water Mains and Appurtenances*, C600 and as provided herein.

Pipe shall be laid according to lines and grade shown on the drawings but in no case shall deviate from a straight line by more than the deflection recommended by the manufacturer for specific diameters and joint types.

For pressure piping, poured concrete thrust blocks shall be installed at all fittings and bends. Joints must be protected by polyethylene prior to placing concrete. Poured in place concrete shall be placed against undisturbed material and shall not cover joints, bolts, or nuts, or interfere with the removal of any joint. Excess concrete shall not be discarded in the trench.

At all times when pipe laying is not in progress or the trench is unattended, the open ends of pipe shall be closed by watertight plugs or other Town-accepted means. Service lines and curb stops shall not be installed within driveways.

All curb stops shall be installed within the Town Right-of-Way.

3.4 TESTING AND DISINFECTION

The pipeline, including hydrant laterals, shall be tested in accordance with AWWA Standard C600-93 (latest version) at the Contractor's expense.

Minimum test pressure shall be 150 psi, and will be monitored at the highest elevation in the lengths of pipeline being tested. The AWWA Standard for maximum allowable

leakage is as follows:

$$L = \frac{SD\sqrt{P}}{148{,}000}$$

where: L = Leakage Allowed, gph.
S = Section of Pipe Length, ft.
D = Diameter Pipe, inches.
P = Average test pressure, psi.

Disinfection and testing of the pipeline shall be directed by the Design/Project Engineer at the Contractor's expense and in the presence of the Town. New waterlines shall be constructed with necessary new valves on both ends so as to maintain a closed system, completely separate from the Town water system until the following disinfection process requirements have been met. AWWA Standard C651 (latest version) shall be used as a basis for the disinfection process outlined as follows:

1. Complete initial flushing of the pipeline to wash out all dirt, debris, etc. which may have accumulated in the pipeline during construction. Contractor shall not operate a Town water system valve to provide flush water through the new waterline. Contractor shall supply flush water via tanker truck or through a temporary connection between the Town's distribution system and the new waterline. Such temporary connection shall include an appropriate cross-connection control device (i.e. backflow preventer) connected to an existing Town fire hydrant.
2. Following flushing, the Contractor will add chlorine to the entire pipeline volume of water and let the mixture set for at least 24 hours.
3. After the 24-hour duration, the water in the pipeline shall be tested for residual free chlorine and must contain a minimum of 50 mg/l chlorine. If less than 50 mg/l is found, then the disinfection procedure shall be repeated until at least 50 mg/l chlorine residual is indicated by test.
4. Upon successful completion of step 3 above, the pipeline shall be flushed again until the chlorine concentration in the pipeline is no higher than that prevailing in the supply system.
5. Chlorinated water flushed from the pipeline shall be dechlorinated prior to being discharged to any surface water.
6. After this final flushing and before the pipeline is placed in service, two (2) consecutive sets of bacteriological samples shall be collected by the Design/Project Engineer in the presence of the Public Works Department. The two (2) samples shall be taken 24 hours apart from each other and delivered by the Design/Project Engineer to the Vermont Health Department, or other Town-accepted testing facility for analysis. At least one set of samples shall be collected from every 1,200 feet of new water main, plus one set from the end of the new water main and at least one set from each branch. All costs associated with sampling and testing shall be paid

for by the Owner.

7. If the initial disinfection fails to produce samples which pass the Vermont Water Supply Division requirements for potable drinking water, then the process shall be repeated at the Contractor's expense until satisfactory results are obtained.
8. Upon satisfactory test results by the Vermont Health Department and with the Public Works Department acceptance, the pipeline may be placed in service.

SECTION 4

STORM DRAINAGE SYSTEMS

SECTION 4 STORM DRAINAGE SYSTEMS

4.1 GENERAL

It is not intended by the Town of Williston that this "Section" be a complete set of specifications. It is to be used as a basic standard for any person planning work in Williston. All materials listed shall be acceptable to the Public Works Director and any items not listed will require acceptance by the Public Works Director before installation. Failure to receive acceptance of materials and methods prior to their incorporation into the work shall leave the person having the said work done liable for the replacement of those substandard materials with acceptable materials at his/her expense.

The person(s) proposing extensions or alterations to the existing stormwater system shall be responsible for complying with all applicable rules, regulations, and ordinances (local, state, federal). Said persons shall submit all necessary documentation, including but not limited to, plans, details and drawings, specifications, permits and applications and shall have obtained all acceptances and paid all applicable fees.

All work in a development project shall have the Design/Project Engineer on site during construction who is hired by the Developer to see that construction is completed according to specifications. The inspector's costs shall be borne by the Developer.

Upon completion of work, the Design Engineer shall submit to the Town a certification report stating that the work has been completed according to the accepted design and all required tests have been passed. Copies of all tests and test results shall be submitted to the Town along with corrective procedures as directed by the municipality and Design Engineer.

All culvert sizes, material types, and culvert locations shall be clearly indicated on the proposed project design and accepted by the Public Works Director prior to installation.

When sizing culverts and storm drainage systems, the Developer must make detailed storm water flow analysis calculations. The Town may request copies of the analysis to review prior to acceptance. All storm water flow analysis shall be designed by a licensed Professional Engineer, and shall be in accordance with the requirements in the Vermont Stormwater Management Manual, Volumes I and II, latest editions.

Storm water detention ponds will not be deeded over to the Town nor will the Town maintain or repair them. A property owners association must be created and is responsible for all costs associated with any ponds. Designers are responsible for ensuring ponds are in compliance with the State Stormwater Maintenance Manual and any Town or State permit conditions.

4.2 MATERIALS

4.2.1 Pipe

Storm drainage pipes shall be HDPE conforming to ASTM D3350 minimum cell classification 335420C for 15” through 60” diameters.

All storm drainage pipes shall have a minimum diameter of 15”.

Underdrain pipes shall be PVC SDR 35 perforated pipe with ½” diameter holes at 5” on center. The underdrain pipes shall have a minimum diameter of 6” and all fittings shall be manufactured PVC SDR 35 gravity sewer fittings.

4.2.2 Culverts

Roadway and driveway culverts shall be HDPE pipe conforming to ASTM D3350 minimum cell classification 335420C for 15” through 60” diameters.

All roadway culverts shall have a minimum diameter of 18””.

All driveway culverts shall have a minimum diameter of 15”.

4.2.3 Catch Basins

Catch basins shall be round precast reinforced concrete structures with a monolithic base as manufactured by S.D. Ireland Brothers, Camp Precast, or accepted equal. The catch basins shall have a minimum 36” diameter, but for structures with more than two (2) pipe penetrations (not including underdrain pipe penetrations), the catch basin diameter shall be a minimum of 48”. Catch basins located within the travelled way shall be designed and constructed to handle an 8 ton (H-20) loading.

Catch basins shall be sized such that:

- At any elevation, a minimum of 60% of the circumference shall be concrete.
- The minimum distance, as measured along the circumference, between two (2) openings shall be 6”.
- The structures shall also meet the minimum requirements of Table 4.1.

Table 4.1
Catch Basin Minimum Requirements

Catch Basin Diameter	Largest Pipe Diameter Allowed	Sidewall Thickness	Concrete Cover Thickness
36”	18”	6”	8”
48”	30”	6”	10”
60”	36”	6”	12”
72”	48”	7”	18”

Flexible manhole sleeves manufactured by Lock Joint or acceptable equal, and shall be provided at all inlet and outlet pipe penetrations.

Underdrain pipes shall run continuously from structure to structure to minimize the need for cleanouts. The underdrain pipes shall enter and exit the structures whenever possible, and be located a **minimum 8” above the carrier pipe’s invert.**

Catch basin frames and grates shall be 24” x 24” square Type F as manufactured by LeBaron or accepted equal. A three (3) flange frame and grate shall be installed adjacent to curbs.

All Catch Basins shall be installed with markings, “No Dumping Drains to Waterway” as approved by the Public Works Director.

4.2.4 Storm Manholes

Manholes shall be round precast reinforced concrete structures with a monolithic base as manufactured by S.D. Ireland Brothers, Camp Precast, or accepted equal. All drainage manholes shall have a minimum 48” diameter. All storm manholes located within the travelled way shall be designed and constructed to handle an 8 ton (H-20) loading.

Flexible manhole sleeves manufactured by Lock Joint or accepted equal shall be provided at all mainline inlet and outlet pipe penetrations greater than 6” diameter.

Underdrain pipes shall run continuously from structure to structure to minimize the need for cleanouts. The underdrain pipes shall enter and exit the structures whenever possible.

Manhole covers and frames shall be 26” diameter Type C as manufactured by LeBaron or accepted equal. The cover shall have the word “Storm” cast into it.

4.2.5 Stone Fill

Stone used to stabilize ditches shall be of sufficient size for the purpose intended, but will be a minimum size of 12” and conform to V.A.O.T. standards “Type II Stone Fill” 706.04b.

Stone fill and riprap shall be as defined by V.A.O.T. standards for stone fill 706.04 and riprap 706.03. Stone fill and riprap shall be placed according to V.A.O.T. specifications 613.

4.3 INSTALLATION

Roadside drainage ditches shall be constructed to a minimum depth of 6” below the road subbase.

Side slopes of ditches shall be a maximum of two (2) foot horizontal to one (1) foot vertical. Grade of centerline of ditch shall be the same as roads designed for 50 mph and over.

Ditches with centerline grade more than 5% shall have stone fill or riprap placed to stabilize.

4.4 FOUNDATION DRAINS

Foundation drains from either residential or commercial private properties are prohibited from discharging into the Town roadway drainage system. The Design Engineer of the project shall make every effort to design a system to accommodate foundation drain needs separate from the Town street system.

4.5 DRIVEWAY ACCESS CULVERT REPLACEMENT OR MAINTENANCE

The Williston Public Works Department shall not replace or maintain any drive access culverts serving private drive or private streets unless one of the following two conditions exists:

- The need to replace or maintain the culvert is due to a direct action of the Williston Public Works Department such as a change on the ditch line, reconstruction of the roadway or widening of the paved or graveled surface of the

roadway.

- The original driveway access culvert was installed under a condition that required the Williston Public Work Department to maintain in the future or some other written agreement that specifically commits the Williston Public Works Department to maintain the culvert.

SECTION 5

STREETS

SECTION 5 STREETS

5.1 GENERAL

It is not intended by the Town of Williston that this “Section” be a complete set of specifications. It is to be used as a basic standard for any person planning work in Williston. All materials listed shall be acceptable to the Public Works Director and any items not listed will require acceptance by the Public Works Director before installation. Failure to receive acceptance of materials and methods prior to their incorporation into the work shall leave the person having the said work done liable for the replacement of those substandard materials with acceptable materials at his/her expense.

The person(s) proposing extensions or alterations to the existing highway system shall be responsible for complying with all applicable rules, regulations, and ordinances (local, state, federal). Said persons shall submit all necessary documentation, including but not limited to, plans, details and drawings, specifications, permits and applications and shall have obtained all acceptances and paid all applicable fees.

All work in a development project shall have the Design/Project Engineer onsite during construction that is hired by the Developer to see that construction is completed according to specifications. The Inspector’s costs shall be borne by the Developer.

Upon completion of work, the Design Engineer shall submit to the Town a certification report stating that the work has been completed according to accepted design and all required tests have been passed. Copies of all tests and test results shall be submitted to the Town along with corrective procedures as directed by the municipality and Design Engineer.

Roadways shall be deeded to the Town three (3) years after a final inspection by the Town has indicated the roadways are complete. During this three (3) year “warranty period”, the Developer is responsible for all maintenance and repairs of work. The Town may elect to perform winter maintenance on the roads during the warranty period if so requested by the Developer to the Public Works Director and as long as the base course of asphalt has been constructed and a winter plow agreement has been executed.

Decisions as to when the specified typical street details apply shall be made in accordance with the Unified Development Bylaws and through a determination by the Public Works Director.

All Town roadways shall have a maximum speed limit of 25 mph, and shall comply with the requirements in Chapter 15 of the Unified Development Bylaw. New streets shall be designed in accordance with the American Association of State Highways and Transportation Official’s (AASHTO) Policy on the Geometric Design of Highways and

Streets.

The highway related construction and materials are intended to conform with the appropriate standards of the State of Vermont Agency of Transportation (V.A.O.T.) "Standard Specifications for Construction", latest edition, and the V.A.O.T. "Design Standards for Road and Bridge Construction", latest edition. Some standards contained in "The Town of Williston Public Works Standards" may differ with the V.A.O.T. Standards. In such cases, the more stringent shall apply.

5.2 DEFINITION OF TYPE

5.2.1 Dense Residential

Streets which service this type of development are generally found in all residential districts other than the Agricultural/Rural Residential (ARZD) District. Lot sizes typically are ½ acre or less and road frontages typically are 150 feet or less. Dense residential street standards may also apply to clustered development in the ARZD District. Streets serving single-family developments and collector streets serving multi-family developments shall be public unless conditions for private streets or private driveways are met. Construction standards are set at the highest level for residential streets in the Town. Some exceptions may be considered by the Public Works Department, upon recommendation by the Development Review Board (DRB), for "affordable" housing projects.

- Minor: Minor streets within the Dense Residential category are those that serve a small number of dwelling units and are designed to carry local traffic only.

- Collector: Collector streets are those that carry higher traffic volumes, including major entrances to a development and connecting roads between developments.

Streets serving moderate density development, with lot sizes typically between ½ and 1/3 acre and road frontages typically between 100 and 150 feet are required to have a sidewalk or recreation path on one side of the street. The right-of-way width and recreation path location, as depicted on the Dense Residential (Collector)/Recreation Path Typical Street Section may also be used for a Dense Residential (Minor) street. Streets serving higher density development, with lot sizes typically ¼ acre or less and road frontages typically 90 feet or less, may be required to have sidewalks or recreation paths (or one of each) on both sides of the street. Sidewalks/paths 6 feet wide or less shall be concrete and paths more than 6 feet wide shall be bituminous concrete.

5.2.2 Rural Residential

Streets which serve this type of development are generally found in the Agricultural/Rural Residential (ARZD) District. Lot sizes typically are one (1) acre or more and road frontages typically are 200 feet or more. Streets serving rural residential development shall be public unless conditions for private driveways are met. Streets serving moderate development density generally are required to have a sidewalk or recreation path on one side of the street.

5.2.3 Commercial/Industrial

Streets which serve this type of development are generally found in the Industrial Zoning District East (IZDE), the Industrial Zoning District West (IZDW), the Mixed-Use Commercial (MUCZD) District and the Taft Corners (TCZD) District. Construction standards and specifications reflect potential truck use and are set at the highest level for streets in the Town.

5.2.4 Urban/Grid Streets

All dense mixed-use development in the Taft Corners (TCZD) District is intended to be serviced by urban and grid streets. These streets are designed to accommodate low-speed traffic, on-street parking and high numbers of pedestrians. Landscaping is incorporated in the urban street design. Buildings may front directly on the right-of-way as depicted on the Urban Typical Street Section.

5.2.5 Private Street

The Development Review Board may allow minor streets within multi-family developments to become private upon submission of legal documents waiving future public maintenance and proof of adequate maintenance capability by a homeowner's association. Construction standards for private streets shall be the same as for dense or rural residential streets and space shall be provided for a minimum 64' wide right-of-way. Roadway subbase requirements will not be reduced but standards for curbs, sidewalks, road width, and pavement thickness may be influenced by numbers of units served and other site layout issues. Determination will be made on a case by case basis by the Developer and the Director of Public Works. All private streets shall execute a Private Roadway document.

5.2.6 Private Driveway

A maximum of two (2) rear lots without public road frontage may be served by a private driveway. Additionally, a private driveway may replace direct road access

for two (2) abutting lots with existing public road frontage (60 foot minimum frontage).

Driveways shall comply with the requirements on the Typical Residential Drive Detail and Profile, and sight distances for a private driveway shall comply with the most recent V.A.O.T. Standard B-71.

5.3 MATERIALS

5.3.1 Geotextile Fabrics

Soil stabilization fabric shall be a woven geotextile Type 600X as manufactured by Mirafi or acceptable equal, and shall be in accordance with V.A.O.T. Section 720. The fabric shall comply with the following specifications; a minimum grab tensile strength of 345 lbs., a maximum grab tensile elongation of 30%, a minimum burst strength of 650 psi, and minimum puncture resistance of 170 lbs.

The stabilization fabric shall be installed in accordance with the manufacturer's instruction with a minimum 24" overlap at any joints or seams.

Drainage fabric for wrapping underdrain trenches shall be a non-woven geotextile Type 140NS as manufactured by Mirafi or acceptable equal, and shall be in accordance with V.A.O.T. Section 720. The fabric shall comply with the following specifications; a minimum grab tensile strength of 130 lbs, a maximum grab tensile elongation of 50%, a minimum burst strength of 160 lbs., and a minimum puncture resistance of 40 lbs.

5.3.2 Subbase

Subbase materials for roadways and sidewalks shall meet the requirements of V.A.O.T. Section 703 and 704. Refer to the Typical Street Sections in Appendix E for the specific types and depths of subbase materials.

5.3.3 Concrete

Minimum compression strength of concrete used for curbs and sidewalks shall be V.A.O.T. Class B, 3500 psi. All concrete shall be in accordance with V.A.O.T. Section 501.

Handicapped sidewalk ramps shall be provided in accordance with V.A.O.T. Standard C-3 and ADA requirements.

5.3.4 Bituminous Pavement

Bituminous pavement for roadways shall meet the requirements of V.A.O.T. Section 406. Refer to the Typical Street Section Details in Appendix E for the specific types and depths of bituminous pavement.

5.3.5 Street Signs

Street signs shall be provided and installed by the Developer at all intersections of the project in accordance with these standards and the MUTCD, latest edition.

Street signs shall be the extruded type green with white letters, ASTM Type III or higher, both sides. All street signs shall be retroreflective.

The sign post shall be located in the area between the curb and sidewalk at a point which will not interfere with pedestrian or vehicular travel.

5.3.6 Traffic Signals

Traffic signals shall include the following minimum requirements:

- Minimum 9 phase controller in-ground mounted box.
- Exclusive left turn signals for each approach (or per Design Engineer recommendation).
- LED traffic lights;
- An exclusive pedestrian phase.
- Pedestrian buttons and poles on each corner with audible alarm and ADA compliant pedestrian signal call (“bird call” type).
- Video Detection.
- Programmable fire pre-emption device mounted on arm (i.e. Opticom/or equal).
- Metal pole and arm (design to be accepted by Public Works Director).
- All visible items: Color gloss black.
- Signal heads (light weight plastic with flat black glare reduction shields).
- Proper signage (all signage to use symbols rather than letters).
- Street lights mounted on metal poles.
- Where conditions warrant, these specifications can be either made less or more stringent by the Public Works Director.
- All other aspects shall be in conformance to the latest standards of V.A.O.T.

5.3.7 Pavement Painting

Pavement painting shall be of the “durable” reflectorized pavement marking according to V.A.O.T. Section 646 and 708.08. Thermoplastic and 3M tape are the desired material.

5.3.8 Guardrail

Steel beam guardrail is the only acceptable guardrail material and shall be provided in accordance with V.A.O.T. standard details. Posts shall be pressure treated (40 years) 8”x12”x6’.

Guardrail shall be built in accordance with V.A.O.T. Standards G-1 series “Steel Beam” guardrail, and V.A.O.T. Section 621. If design speed is greater than 40 mph, utilize G-14 or G-15 series.

Guardrails shall be installed when the height at the edge of shoulder is greater than five (5) feet and/or the embankment slope is steeper than a 3:1 as a minimum. At locations of guardrails, the shoulder shall be widened a minimum of three (3) feet. Guardrails can also be required at other appropriate locations as requested by the Town.

Where slopes are 3:1 or flatter, guardrail may not be needed if the area at the bottom of the slope is free of hazards. Where slopes are 4:1 or flatter, guardrail is not normally required.

5.3.9 Monuments

Right-of-way monuments shall be installed at all street corners, property corners, and all points of curve and/or tangency as shown on the accepted plans.

Concrete monuments shall be cast in one piece 4”x4”x48” of class B concrete with four (4) reinforcing steel rods. The top shall have a marked center which shall be the point of reference. Four (4) inch maximum above grade.

Marble monuments shall be good quality white marble 4”x4”x48” and have a marked center on top to be used as a point of reference.

The monument shall be erected at locations indicated on the plans or as directed by the Design/Project Engineer. They shall be set vertically and as to depth so that the top of the monument is at an established grade not to exceed four (4) inches. The monuments are to be set in place after all other street development is completed.

5.4 INSTALLATION

5.4.1 Concrete

Concrete shall be placed in accordance with V.A.O.T. Section 501 for structural concrete and Section 700.

Minimum compressive strength, at 28 days, shall be:

- Class A: Not less than 4000 psi
- Class B: Not less than 3500 psi

All testing of structural concrete shall be paid for by the Developer.

All concrete shall be treated with a curing/preservation treatment within 15 minutes of the completion of the finishing process and again prior to November 1. Refer to V.A.O.T. Section 501 for the curing period for various concrete components.

No concrete will be placed when ambient temperature is less than 40ºF without specific acceptance of the Public Works Director; follow procedures outlined in Recommended Practice for Cold Weather Concreting (ACI 306); or Hot Weather Concreting (ACI 305).

No concrete will be placed in standing water.

5.4.2 Bituminous Pavement

- Material and testing requirements for bituminous concrete shall conform to V.A.O.T. Standards for construction (latest edition).
- Base Courses – in accordance with V.A.O.T. Section 303, plant mixed material shall not be placed between **November 1 and May 1**. The material shall not be placed when the air temperature at the paving site in the shade and away from artificial heat is 32ºF or lower. When it is in the public interest, the Public Works Director may extend the dates of the paving season.
- Wear/Surface Courses – In accordance with V.A.O.T. Section 404 material shall be applied only when the following conditions prevail:
  - The atmosphere temperature is at least 45ºF in the shade and rising.
  - The road surface and aggregate are sufficiently dry.
  - Weather conditions or other conditions are favorable and are expected to remain so for the performance of satisfactory work.
- Bituminous wear/surface courses shall not be applied between **October 15 and May 15** unless authorized in writing by the Public Works Director.

5.4.3 Lawns and Grassed Areas

All areas of excavation and/or surface work which are on existing grassed lawn areas shall be restored to acceptable lawn area.

General procedure to be used in lawn restoration is:

- Apply a minimum of 4” of good topsoil over area to be seeded.
- Grade topsoil to blend with existing lawn areas.
- Fertilize with a non-phosphorus commercial fertilizer.
- Seed with a permanent high quality lawn grass seed at the rates shown in the following table.
- Mulch seeded area.

Table 5.1
Seeding Rates for Final Stabilization

Choose from:	Variety	lbs./acre	lbs./1000 sq.ft.
Birdsfoot trefoil	Empire/Pardee	5[(1)]	0.10
or			
Common white clover	Common	8	0.20
plus			
Tall fescue	KY-31/Rebel	10	0.25
plus			
Redtop	Common	2	0.05
or			
Ryegrass (perennial)	Pennfine/Linn	5	0.10

Notes:
1. Mix 2.5 each of Empire and Pardee or 2.5 lbs. of Birdsfoot and 2.5 lbs. white clover per acre.
2. Further information provided in Rule 8 of the State of Vermont Low Risk Site Handbook for Erosion Prevention and Sediment Control, latest edition.

All areas of excavation and/or surface work which are grassed areas shall be restored to acceptable grass growth. Generally, grading, fertilizing, seeding, and mulching with acceptable materials will provide sufficient grass growth. An urban mix grass seed shall be used.

5.5 TESTING

5.5.1 General

All testing shall be paid for by the Developer. If tests show that the materials do not meet the standards specified, the Developer shall make whatever corrections necessary to remedy the incorrect work and all additional testing required due to

the incorrect work shall be paid for by the Developer.

5.5.2 Subbase and Granular Material

To assure all materials used are as specified, the following testing procedures are required:

- Minimum of one (1) sieve analysis for each type of material shall be sampled for each 500 L.F. of roadway;
- Samples and testing shall be done by an independent testing agency;
- Samples shall be taken by the Design/Project Engineer;
- Locations of the sampling shall be documented by the Design/Project Engineer and appear as roadway stationing on each sieve analysis result sheet;
- Samples shall be taken from road or from trucks on-site, as the road is being built;
- Samples shall be random and representative of material;
- Test results shall be submitted to the Public Works Department.

5.5.3 Concrete

Testing for concrete curbs, sidewalks, and drive aprons shall be as follows:

- During the course of the work, compression test cylinders will be made and tested by a qualified testing laboratory. Test specimens shall be made, stored, and tested in accordance with ASTM C-31;
- Four (4) test specimens shall be made for each day's pour or a minimum of four (4) test specimens for each 50 cubic yards of concrete. One (1) cylinder shall be tested at seven (7) days and three (3) at twenty-eight (28) days. The Developer shall cooperate in the taking of test cylinders and provide suitable storage at the site for the test cylinders. Air contact test for each set of cylinders shall be taken and results provided to the Public Works Department.
- Test results shall be submitted to the Public Works Department.

5.5.4 Paving

All testing associated with V.A.O.T. Standards, Section 406, will be required if, in the opinion of the Town, the bituminous asphalt pavement being supplied and placed is not in accordance with the specifications.

SECTION 6

EROSION CONTROL MEASURES

SECTION 6 EROSION CONTROL MEASURES

6.1 GENERAL

It is not intended by the Town of Williston that this “Section” be a complete set of specifications. It is to be used as a basic standard for any person planning work in Williston. All materials listed shall be acceptable to the Public Works Director and any items not listed will require acceptance by the Public Works Director before installation. Failure to receive acceptance of materials and methods prior to their incorporation into the work shall leave the person having the said work done liable for the replacement of those substandard materials with acceptable materials at his/her expense.

The person(s) proposing any construction activity that disturbs ¼ or more acres of land shall be responsible for complying with all applicable rules, regulations, and ordinances (local, state, federal). Said persons shall submit all necessary documentation, including but not limited to, plans, details and drawings, specifications, permits and applications and shall have obtained all Town acceptances and paid all applicable fees.

All work on the project site shall have the Design/Project Engineer on site during construction who is hired by the Developer to see that construction is completed according to specifications. The inspector’s costs shall be borne by the Developer.

Erosion control measures for developments shall comply with the requirements in Chapter 29, Watershed Health, of the Unified Development Bylaws.

Low risk development as defined in Chapter 29, shall comply with the guidance in the State of Vermont Low Risk Handbook for Erosion and Sediment Control, latest edition. Erosion control measures for other developments shall comply with the standards in Chapter 29 and will require an Erosion and Prevention and Sediment Control Plan in accordance with the Vermont Standards and Specifications for Erosion Prevention and Sediment Control Plan.

6.2 MATERIALS

The materials for the temporary and permanent erosion control measures shall comply with the State of Vermont Low Risk Handbook for Erosion and Sediment Control and the Vermont Standards and Specifications for Erosion Prevention and Sediment Control Plan.

6.3 INSTALLATION

6.3.1 Dust Control

Water and/or calcium chloride shall be applied to travelled areas and stockpiles as construction progresses to control the dust. Blowing and accumulation of dust shall be controlled so that it does not become a nuisance to adjoining properties

or cause a deterioration of surface water quality. The number of applications and the amount of water and chloride used shall be based on field and weather conditions and as ordered by the Public Works Director.

6.3.2 Dewatering

All water flowing off the project site shall be free of sediment. Any water that accumulates on the project site within a trench or pit, or from dewatering activities, shall be properly treated to remove sediment prior to being discharged from the site.

SECTION 7

STREET TREE PROTECTION AND PLANTING

SECTION 7 STREET TREE PROTECTION AND PLANTING

7.1 GENERAL

It is not intended by the Town of Williston this "Section" be a complete set of specifications. It is to be used as a basic standard for any person planning to develop new or work in the Town Public Right of Way. All items included shall be acceptable to the Public Works Department. Any item not listed will require acceptance by the Public Works Director before installation. Failure to receive acceptance of the materials and methods prior to their installation shall leave the person having the said work done liable for the replacement of those substandard materials with acceptable materials at his/her expense.

The person(s) proposing Street Trees shall be responsible for complying with all applicable rules, regulations and ordinances (local, state, and federal). Said persons shall submit all necessary documentation, including but not limited to, plans, drawings, details, permits and applications and shall have obtained all acceptances and paid all applicable fees.

This section provides specific technical standards and specifications for selection, installation and maintenance of Street Trees, as well as the protection of any tree that is designated to remain during construction.

These standards intend to support Williston's effort to preserve existing trees and promote the planting of new trees for the purpose of protecting the public health, welfare, environment, and aesthetics of the Town of Williston and its citizens.

All work in the future Public Right of Way shall have the Design/Project Engineer on site during construction that is hired by the Developer to see that construction is completed according to specifications. During the tree planting stage, the Developer will be required to have a certified Arborist inspect trees prior to planting and again once they are planted. The tags for the trees shall remain on the trees and only be removed after final inspection by the Arborist. The Developer shall supply the Arborist with the trucking slip which shall include the location of where the plantings were purchased and transported from.

7.2 MATERIALS

7.2.1 Tree Types and Sizes

The following Street Trees are recommended for the Town of Williston Right-of-Way:

Table No. 7.1
Recommended Tree Species and Sizes

Common Name	Scientific Name	Hardiness Zone	Salt	Mature Height (Feet)	Crown Spread	Spring Planting	Native to VT	Rooting Space
Cherry, Sargent	Prunus sargentii 'Columnaris'	4	Intermediate	30 - 50	15'	X		7.5'
Chokecherry, Amur	Prunus maackii	2	Intermediate	30 - 50	30'			15'
Corktree, Amur	Phellodendron amurense "Macho"	4	Intermediate	30 - 50	40'	X		20'
Crabapple 'Adirondack'	Malus spp	4	Tolerant	<30	10'			5'
Crabapple 'Indian Summer'	Malus spp	4	Tolerant	<30	20'			10'
Crabapple 'Katherine'	Malus spp	4	Tolerant	<30	25'			13'
Crabapple 'Robinson'	Malus spp	4	Tolerant	<30	25'			13'
Crabapple 'redbud'	Malus x zumi	4	Tolerant	<30	25'	X		13'
Hawthorn, English	Cretagus laevigata 'Crimson Cloud	4	Intolerant	<30	15'	X		10'
Hawthorn, Green	Cretaegus viridis 'Winter King'	4	Intolerant	<30	25'	X	X	13'
Hawthorn, Washington	Cretagus phaenopyrum	4	Intolerant	<30	20'	X		10'
Honeylocust	Imperial'	4	Tolerant	30 - 50	40'			20'
Hophornbeam or Ironwood	Ostrya virginiana	4	Intolerant	30 - 50	35'	X	X	18'
Hornbeam, American or Musclewood	Carpinus caroliniana	3	Intolerant	30 - 50	25'	X	X	13'
Horsechesnut, Ruby Red	Aesculus x carnea 'Briotii'	5	Intermediate	30 - 50	40'			25'
Katsuratree	Cercidiphyllum japonicum	5	Intermediate	30 - 50	35'	X		18'
Lilac, Japanese Tree	Syringa reticulata 'Ivory Silk'	3	Tolerant	<30	15'			7.5'
Lilac, Japanese Tree	Summer Snow'	3	Tolerant	<30	20'			10'
Amur Maackia	Maackia amurensis	4	Intermediate	<30	35'			18'
Magnolia, Loebner	Magnolia x loebneri "Merill'	4	Intermediate	30 - 50	25'			13'
Maple, Amur	Acer ginnala	3	Intermediate	30 - 50	15'	X		7.5'
Maple, Hedge	Acer campestre	5	Intermediate	30 - 50	30'			15'
Maple, Tatarian	Acer tataricum	3	Intermediate	<30	20'	X		10'
Moutain Ash, Swedish	Sorbus intermedia	5	Intermediate	<30	20'			10'
Nannyberry, Tree form	Viburnum lentago	3	Intolerant	<30	10'		X	5'
Pear, Callery	Pyrus calleryana 'Aristocrat'	5	Intermediate	30 - 50	30'	X		15'

Common Name	Scientific Name	Hardiness Zone	Salt	Mature Height (Feet)	Crown Spread	Spring Planting	Native to VT	Rooting Space
Redbud, Eastern	Cercis canadensis	5	Intolerant	<30	25'	X		13'
Serviceberry or Shadbush	Amelanchier canadensis	3	Intermediate	<30	15'		X	7.5'
Serviceberry, Allegheny	Amelanchier laevis	4	Intermediate	<30	15'		X	7.5'
Serviceberry, Allegheny	Amelanchier laevis 'Cumulus' Tree form	4	Intermediate	<30	15'			7.5'
Linden, Littleleaf	Tilia chordate 'Chancello'	3	Intermediate	>50	25'			13'
Linden, Littleleaf	Tilia chordate 'Greenspire'	3	Intermediate	>50	45'			23'
Maple, Amur	Acer ginnala	3	Intermediate	30-50	15'	X		7.5'
Maple, Tatarian	Acer tataricum	3	Intermediate	<30	20'	X		10'

Minimum caliper of tree **shall** be 2" to 3-½" diameter. Salt-tolerant plant materials must be used in and around paved areas and in snow storage areas as required by Town's Unified Development Bylaws, Section 16.

7.3 INSTALLATION

This planting specification applies for trees that are Street Trees in the Town of Williston Right-of-Way. The most important task in landscaping a transportation project is to establish a good plant bed. For plants to thrive, they require viable rooting space where sufficient soil, water and air is available to nourish the plant. The size of this plant bed should relate to the mature size of the plant species.

No planting shall occur from July 1 to August 31 **without** prior Town acceptance.

All trees to be planted shall come from a nursery with the same hardiness as Vermont, shall be well rooted, balled and burlapped or containerized nursery-grown stock, free of injury, harmful insects and disease. All trees to be planted shall conform to the ANSI Z60.1 *American Standard for Nursery Stock.*

7.3.1 Planting Procedure

Street Trees shall be planted in accordance with the ANSI A300 *Best Management Practices for Tree Planting* and as provided in the Town's Unified Development Bylaws Section 26.

Plant hole width shall be three times the diameter of the root ball or greater where possible. Scarify the sides and the bottom of the pit. Synthetic root ball coverings should not be allowed. The top third of natural fiber coverings shall be

removed without disturbing the root ball. Wire baskets shall be removed or cut after tree is placed in the hole. Cuts should be sufficient to prevent root girdling. Cut and remove burlap from 2/3 of root ball. Material removed from hole shall be exported to an acceptable site.

The tree must be placed upright in the planting hole at the depth that places the beginning of the root flare at, or slightly above, finished grade. Place tree slightly above finished grade especially where soils are wet. To check the proper depth of the root ball, place the tree in the hole and lay a pole or shovel across the original grade - the top of the root flare should be 1” to 2” higher. Locate the tree in the hole, and rotate the tree to direct the main branches away from the street side, if possible.

Provide stakes only when the tree is planted in excessive windy areas or it is top-heavy. Stakes must be removed after one year or sooner if roots are established.

When planting a new Street Tree or relocating an existing Street Tree in an urban setting, where little usable soil is available, the Developer shall install a minimum 36” deep layer of CU-Structural Soil™, or accepted equal, in a 5’ by 5’ area surrounding the root ball . CU-Structural Soil™ is a two-part mix which includes uniformly-graded ¾” to 1-½” angular, crushed stone that functions as the load-bearing component, and heavy clay loam or loam with a minimum 20% clay and between 2% to 5% organic matter that functions as the nutrient and water holding agent. Structural soil of this type can be placed under paved parking areas and sidewalks as it provides adequate load bearing capacity.

Partially backfill the hole with compost, topsoil, or CU-Structural Soil™, then lightly compact or use water to settle the soil, and then repeat until backfilled to finish grade, allowing for 3” to 4” of bark or mulch. Avoid compacting the soil around the plant. Place 3” to 4” of mulch or bark over root ball, keeping the mulch away from the trunk a minimum of 2”. Mulch shall be screened untreated wood chips ½” to 1” in size, spread to a 2” depth out to the edge of the root ball.

Installed street trees are subject to the inspection. Street trees shall be planted within six (6) weeks of when permanent vegetation is established with the Right-of-Way.

7.3.2 Planting Locations

Sight distances recommended by AASHTO (American Association of State Highway and Transportation Officials - *A Policy on Geometric Design of Highways and Streets*) limit the use of planting in areas where the driver’s view of oncoming cars must be maintained to avoid collisions.

The distance trees may be planted from curbs or curb lines and sidewalks will be in accordance with the three species size classes listed in *Recommended Trees for Vermont Communities* (by VT Urban & Community Forestry Program, April 2001).

Street Trees shall be planted in a planting strip that is at least 8 feet in width and has at least 3 feet of uncompacted soil depth as provided in the Town's Unified Development Bylaws, Section 26.

Tree pits or wells may be used in areas of intensive commercial or mixed use development or where a continuous planting strip is not feasible as provided by Town's Unified Development Bylaws, Section 26. Where sidewalk width is less than 8 feet and new trees will be installed in a tree well, metal tree grates shall be used and accepted by Public Works. Minimum size grates shall be 4' x 4' unless specified otherwise. All tree grates shall be mounted in frames with the frames inset into a concrete foundation within the sidewalk or surface material and shall be flush with the surrounding surface.

No Street Trees may be planted under or within 20 lateral feet of any overhead utility wire, or over or within 6 lateral feet of any underground water line, stormwater line, sewer line, transmission line or other utility. No tree shall be planted without prior notification of Dig Safe.

7.4 PROTECTION OF EXISTING TREES DURING CONSTRUCTION

All trees within the Town of Williston Public Right-of-Way that are specifically designated to be protected during the construction phase of a development project are subject to the Town's Unified Development Bylaws, Section 23. Designated trees must be identified on a landscaping plan as indicated by Unified Development Bylaws, Section 23.

There shall be no clearing, grading, excavation, or other construction activity, including the placement of underground utilities, within the drip line of trees that are to be retained as provided in Unified Development Bylaws, Section 29.

7.4.1 Protective Tree Fencing

The trunks of all trees to be saved shall be shielded for at least 6' with 2 x 4's staked around the circumference of the tree with barrier fence. There shall be no activity within this tree protection zone except watering, fertilizing, or installation of erosion prevention or sediment control measures as required.

7.4.2 Pruning

Pruning of existing trees will be determined by the Public Works Department and kept to a minimum whenever possible. Cuts shall be made to ensure a rapid and complete wound closure. Sharp, clean and appropriately sized equipment shall be used to prune the tree. Heavy equipment shall not be used for pruning. Not more than 25% of the functioning leaf and stem area be removed within one calendar year.

Pruning shall conform to the most current edition of the *Standard Practices for Tree Care Operations* – ANSI A300-1995, Appendix G; *Safety Standards*, ANSI Z133.1-1994, Appendix F; and *Tree Pruning Guidelines*, Appendix E.

7.4.3 Transplanting an Existing Tree to another Location

Every effort shall be made through the design, layout, and construction of a subdivision to save as many existing trees as possible, especially those over 8" in diameter.

Street Trees that are in conflict with utility infrastructure where the conflict cannot be resolved may be relocated if accepted by the Public Works Director (e.g., a tree planted directly on top of a damaged sewer lateral.) Location will be determined by the Public Works Director. The Developer/Owner shall identify any trees requiring transplantation at the pre-construction meeting.

Transplanting of an existing Street Tree shall occur when the tree is dormant, in early spring or late fall. Transplanting shall not occur without the Public Works Department supervision. Any tree to be transplanted is subject to the 2-year maintenance period as described for new street trees in the Town's Unified Development Bylaws, Section 26.

7.4.4 Removal of an Existing Street Tree

A Street Tree may not be removed without Public Works Director review and acceptance, except in certain emergencies. The Developer/Owner shall identify any trees requiring removal at the pre-construction meeting. A removed tree must be replaced by the property Owner and/or Developer.

7.4.5 Street Trees Damaged During Construction

Any damage or injury to Street Trees shall be reported within 12 to 24 hours to the Project Engineer and the Public Works Department so that mitigation can take place. All mechanical or chemical injury to branches or to roots over 2" in diameter shall be reported.

SECTION 8

PATHWAYS

SECTION 8 PATHWAYS

8.1 GENERAL

It is not intended by the Town of Williston that this "Section" be a complete set of specifications. It is to be used as a basic standard for any person planning work in Williston. All materials listed shall be acceptable to the Public Works Director and any items not listed will require acceptance by the Public Works Director before installation. Failure to receive acceptance of materials and methods prior to their incorporation into the work shall leave the person having the said work done liable for the replacement of those substandard materials with acceptable materials at his/her expense.

The person(s) proposing extensions or alterations to the existing recreational pathway or a new recreational pathway shall be responsible for complying with all applicable rules, regulations, and ordinances (local, state, federal). Said persons shall submit all necessary documentation, including but not limited to, plans, details and drawings, specifications, permits and applications and shall have obtained all acceptances and paid all applicable fees.

All work in a development project shall have the Design/Project Engineer on site during construction that is hired by the Developer to see that construction is completed according to specifications. The Inspector's costs shall be borne by the Developer.

Pathways shall be deeded to the Town three (3) years after a final inspection by the Town has indicated that the pathways are complete. During this three (3) year "warranty period", the Developer is responsible for all maintenance and repairs of work.

8.2 MATERIALS

8.2.1 Pathway Subgrade

The subgrade is the undisturbed ground and acts as the primary foundation for the pathway. The subgrade shall have a moderate slope and firm, dry soils. The subgrade ultimately receives all of the weight on the surface of the pathway, therefore, it is important that the subgrade be structurally capable of supporting the pathway's design load. The Design/Project Engineer and the Public Works Department will determine the suitability of the subgrade. The subgrade shall be sloped, by crowning the tread or establishing a cross slope to provide proper drainage of surface and subsurface waters.

8.2.2 Pathway Subbase

The subbase is the area between the subgrade and the pathway surface. Its primary function is to transfer and distribute the weight from the surface of the pathway to the subgrade. The subbase material shall be constructed of coarse

graded stone aggregate. Aggregate shall consist of material reasonable free from silt, loam, clay, or organic matter.

8.2.3 Geotextile Fabrics

Geotextiles shall be used to strengthen the subgrade, subbase, and surface of the pathway. The selection of geotextile fabrics, woven or nonwoven, depends on the type of pathway. Local conditions will determine which type and weight is best suited for the project, and as determined by the Design/Project Engineer.

8.2.4 Pathway Surface

The pathway surface materials shall be determined based on the type and intensity of the pathway use, and the contours of the land. Surface materials shall be chosen such that they provide a firm, even, and dry tread, capable of supporting designated users. Other considerations include availability of the surface material, its cost to purchase and install, its life expectancy, the maintenance required, and user satisfaction.

Surface materials include asphalt concrete, concrete, and recycled materials.

8.2.5 Bridges/Crossings/Culverts

Bridges and crossings may be constructed using timber, reinforced concrete, or steel, as approved by a licensed Structural Engineer. Bridges and stream crossings shall have a skid-resistant surface. Culverts shall be constructed using timber, concrete, metal, or plastic. See Section 4 for additional culvert requirements.

8.2.6 Pathway Signs

All directional, identification, and informational signs shall be paid for and installed by the Owner/Developer under the direction of the Public Works Department. All signs shall be clearly posted. Directional signs shall give direction, destinations, and distances along the pathway. Identification signs must label pathway features. Informational signs shall contain educational messages, regulations, and other information important for user safety and appropriate pathway use. Signs shall be plastic or metal.

8.3 INSTALLATION

8.3.1 Subbase

Subbase shall be either hand or machine placed and compacted to 95% standard optimum density, per ASTM D-698, using a mechanical compacter or a

mechanical roller that weighs at least as much as the designated design load of the pathway. The surface shall be level and smooth.

8.3.2 Surface

Installation of asphalt concrete, concrete, or recycled materials used for the pathway surface shall follow the Typical Recreation Path Section detail.

8.3.3 Pathway Width

The standard width for a multiple-use pathway is 10'.

8.3.4 Pathway Signs

Pathway signs shall be installed on free-standing posts.

8.3.5 Bridges/Crossings/Culverts

Streams with year-round flows require bridges for crossing. Bridges and stream crossings should be designed so that they are safe, sturdy, vandal-resistant, and easily maintained. They should have a skid-resistant surface. The scale of the bridge shall be in keeping with its surroundings. The bridge color shall blend in with the natural environment.

Bridges shall be set high enough to pass floods. The decks shall be stabilized to minimize vibrations. Railing surfaces shall be smooth and clean and are free of splinters. They shall allow a view to the creek for all users while also preventing anyone from falling through. Hand railings shall extend beyond the end of the bridge where there are abrupt drops in grade.

Culverts are covered structures that convey water under a pathway, preventing erosion and flooding. The culvert pipe shall be installed below the pathway and shall be covered with soil.

8.3.6 Buffer

A buffer strip of at least 50 to 100 feet between pathways and streams, riverbanks, lake shores, and other watercourses is recommended. A buffer of sufficient distance shall be created between all pathways and sensitive areas.

8.3.7 Drainage Ditches

Drainage ditches are trenches dug parallel to a pathway to drain a wet area and cross under the pathway in the form of a culvert. The ditch shall be located on

the required side of the pathway. The bottom shall be at least 12” wide and have side slopes less than or equal to a 3:1.

8.4 ACCESSIBLITY

Parking shall be made accessible to the public. The pathway shall be accessible from the parking area. Summary information about the pathway including description of pathway length, width, and slopes, shall be provided by a sign at the pathway entrance. The pathway entrance and parking area shall be appropriately signed.

8.5 MAINTENANCE

The pathway shall be sufficiently well cleared to allow passage during summer and fall without undue difficulty or confusion. Pathways shall be kept clear of vegetation and obstructions which would unnecessarily impede any users. A clipping rotation of every two years is generally adequate for maintaining most pathways.

Branches and shrubs should be trimmed away from all pathway signs. When clipping, branches shall be cut at the collar and all shrubby stems shall be cut at the ground. Old stubs shall be cut at the branch collar. Overhead branches that fall within 8’ of the pathway shall also be cut.

Blowdowns from ice storms, high winds, and snow loads bring trees and branches down across pathways every winter. They shall be removed as promptly as possible during the spring. If a fallen tree interferes with the flow of water in pathway drainage structures, the entire tree shall be removed or new drainage structures shall be installed.

Inappropriate use of pathways shall be discouraged. Where unofficial trails branch off from the established pathway, or cut across switchbacks on the pathway, they should be blocked with logs and brush.

SECTION 9

STREET LIGHTING SYSTEMS

SECTION 9 STREET LIGHTING SYSTEMS

9.1 GENERAL

This section provides specific technical standards and specifications for selection, installation and maintenance of Town-owned street lighting systems.

It shall be the responsibility of the Developer and Contractor (hereinafter referred to as the Developer) to comply with all the provisions of this section and all applicable sections of the "Williston Utility Ordinance". Where two or more sections of these Public Works Standards conflict the Developer shall seek clarification and acceptance from the Williston Public Works Department.

Street Lights shall be installed in compliance with all applicable codes, standards, rules, regulations and ordinances (local, state, and federal). Said Developer shall submit all necessary documentation, including but not limited to, plans, drawings, details, permits and applications and shall have obtained all Town acceptances and paid all applicable fees prior to commencing the project.

This section is not intended to be a complete set of specifications; rather it is to be used as a basic design standard for any developer planning to install street lights in present or proposed Town Right-of-Way. All items supplied shall be acceptable to the Town of Williston Public Works Department. Materials, methods or workmanship not listed within this section will require acceptance by the Public Works Director before commencing the installation. Materials, methods or workmanship that do not meet these requirements shall be removed, replaced or repaired or otherwise brought into compliance with the provisions of this section by the Developer at his/her sole expense prior to acceptance of the system by the Town.

The Developer shall provide for the Design/Project Engineer to be on site during construction to certify that construction is completed according to specifications. Electrical installations of street lights, feed cables and controllers shall be made under the direct supervision of a qualified licensed Electrician. The cost of all supervision and inspections shall be borne by the Developer.

9.2 MATERIALS & INSTALLATION

9.2.1 Lighting

All proposed lights must be photo cell controlled, fully shielded, down casting, energy efficient and installed at a maximum height of 25 feet.

- Light Fixture – Size and style to be specified and accepted on a per job basis. Beta, LED Edge Series (or accepted equal), 22 year life span rated at L-70.
- Photo Cell – SELC 8483 part #8483004 (or accepted equal).

- Mast Arm – If used shall be 2” and suitable for use both in style and function with the proposed pole.
- Pole – To be specified and accepted on a per job basis. Regardless of the style all poles shall be salt resistant, utility grade, and designed to have a minimum 50 year life span. Poles should also be designed to withstand sustained 80 MPH wind load with a 1.3 peak factor; installations in areas that regularly experience sustained winds of 20 MPH or more should be reviewed and approved by the Design/Project Engineer to determine the appropriate strength of the pole and foundation.

9.2.2 Underground Lighting Circuit

- Conduit system – All street lighting conductors shall be installed in 2” Schedule 40 PVC electrical conduit buried a minimum of 36” to the top of the pipe and installed in a 4” envelope of sand unless otherwise directed. Sweeps shall have a 36” minimum radius.
    - When roadway or utility crossings are encountered one of three options are allowed:
        - Concrete encased
        - Sleeved in a 3/8” wall thickness well casing
        - HDPE for boring under roadway
- Secondary Pedestals - Secondary junction points not occurring in the light pole shall be made above grade in a pedestal. Pedestal shall be Nordic #PSP-91330-MG or accepted equal.
- Connections – Connections in street light poles shall be a CU/AL rated bolted connection such as a tinned split bolt connector. Pedestal connectors shall be insulated bar type connectors (RNC #350-31) or accepted equal.
- Conductor - #6AWG, three wire, 600V URD cable.

9.2.3 Power Supply

- Voltage – Typical voltage shall be 120/240V.
- Length of Run – No lights shall be installed more than 1,200 cable feet from the power source.
- Meter Socket – When required the meter socket shall conform to utility specifications (contact utility for details).

APPENDICES

APPENDIX A

LIST OF FORMS AND APPLICATIONS

LIST OF FORMS AND APPLICATIONS

Application for Access Permit

Town Engineering Service Charges

Right-of-Way Permit Application

Sewer Allocation Request – Attachment B

Williston Sewer Allocation Ordinance

Application for Water Service

Application for Sewer Service

Construction Estimate Form

As-Built Checklist

(*Forms and applications are available at the Town of Williston Public Works Department and on the Town's website)*

APPENDIX B

SANITARY SEWER DETAILS

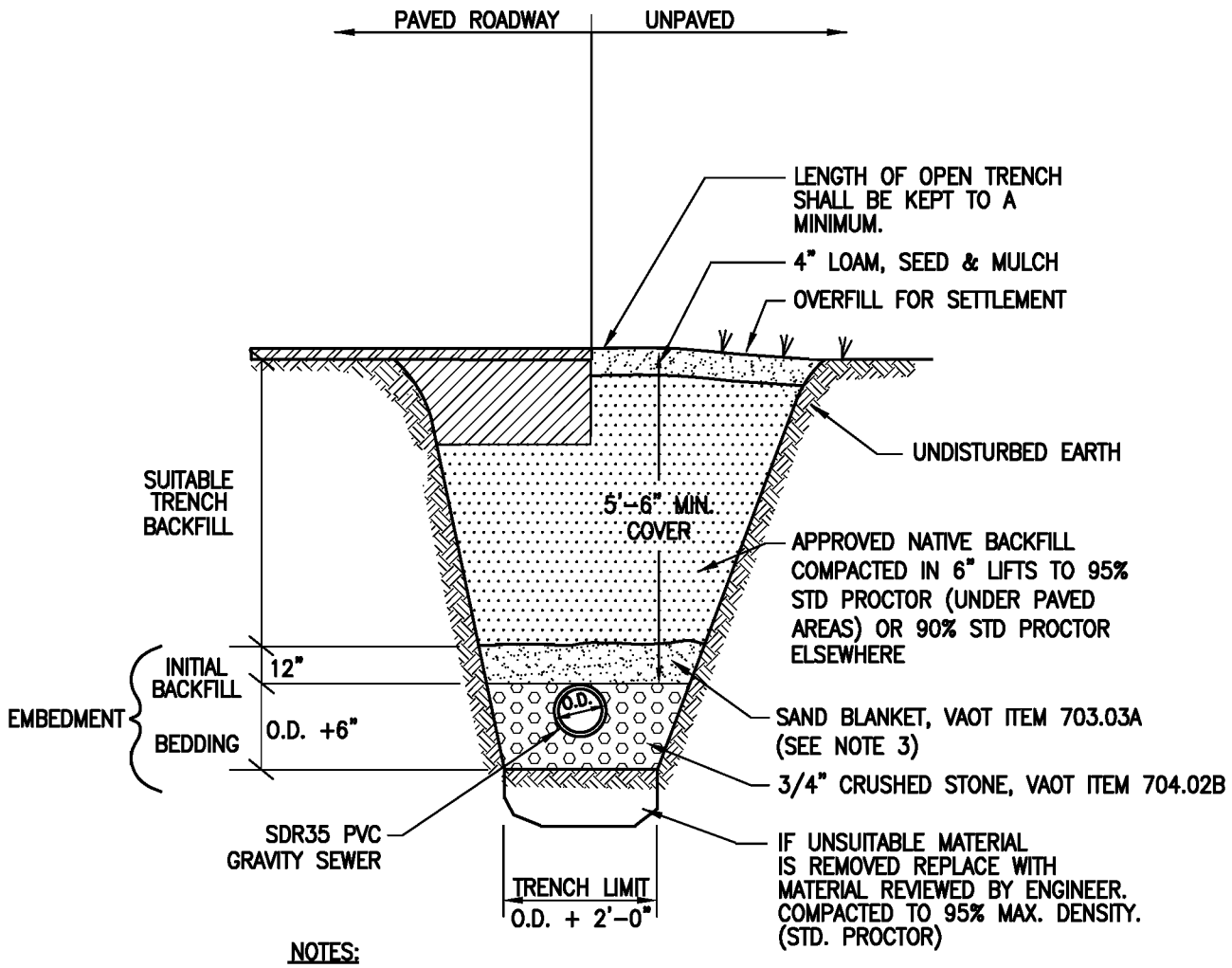

NOTES:

1. NO MECHANICAL TAMPERS SHALL BE USED DIRECTLY OVER PVC PIPE TO ENSURE PIPE IS NOT DAMAGED.
2. BEDDING TO PROVIDE A FIRM, STABLE, CONTINUOUS AND UNIFORM SUPPORT FOR THE FULL LENGTH OF PIPE.
3. FOR INITIAL BACKFILL, CONTRACTOR CAN USE 3/4" CRUSHED STONE OR SAND BORROW.

TOWN OF WILLISTON PUBLIC WORKS DEPARTMENT	
SCALE: NTS	DATE: APRIL 2010
DRAWING #: B-1	DRAWN BY: FA&A
SANITARY SEWER TRENCH DETAIL	

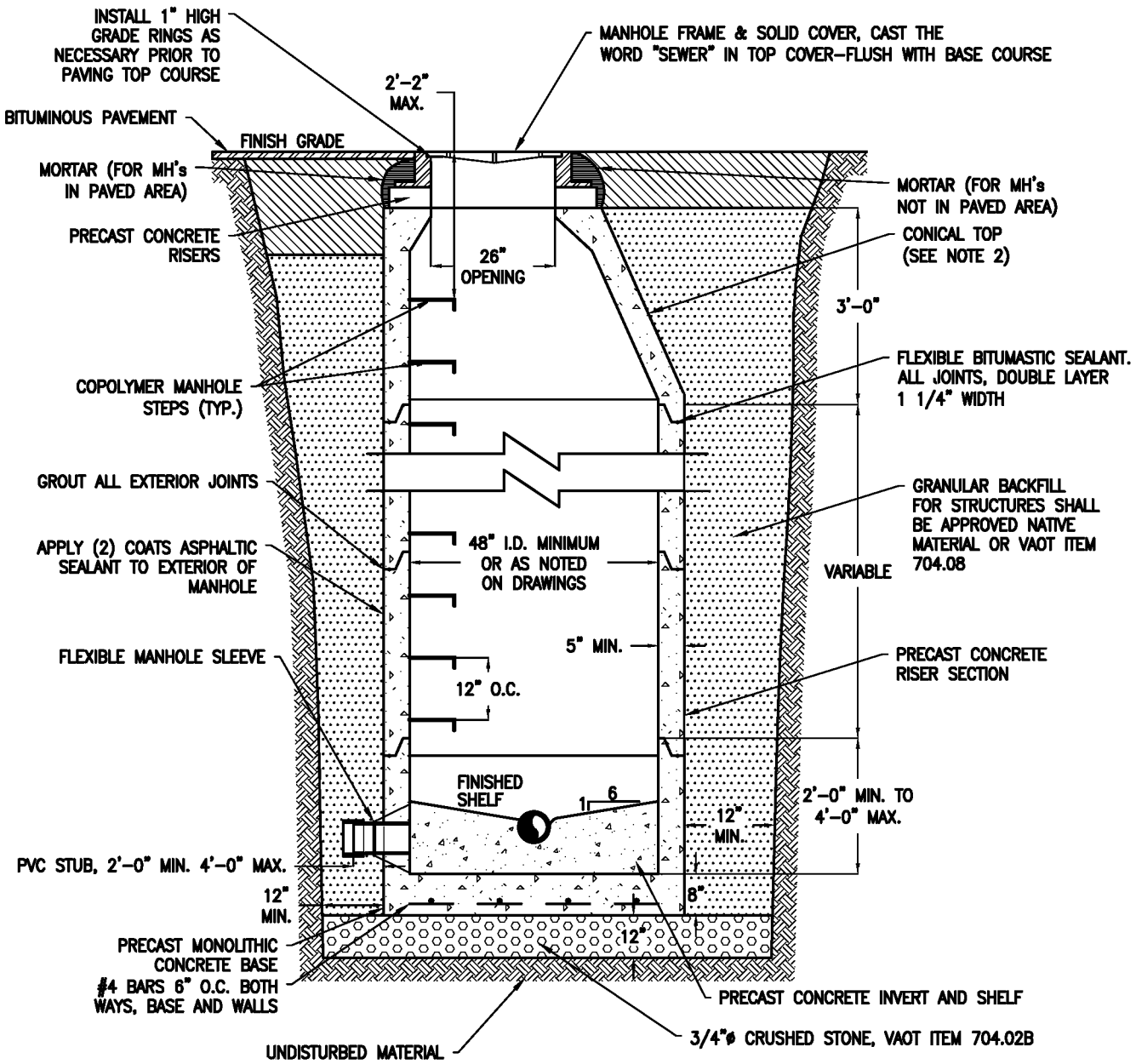

NOTES:

1. PROVIDE SMOOTH SWEEPING TRANSITIONS BETWEEN INVERTS OF INTERSECTING PIPE.
2. IF DEPTH OF MANHOLE IS 7 FEET OR LESS FROM RIM TO CENTERLINE INVERT THEN A FLAT TOP SHALL BE INSTALLED IF DEPTH OF MANHOLE FROM RIM TO CENTERLINE INVERT IS MORE THAN 7 FEET THEN A CONICAL TOP SHALL BE INSTALLED.

TOWN OF WILLISTON PUBLIC WORKS DEPARTMENT	
SCALE: NTS	DATE: APRIL 2010
DRAWING #: B–2	DRAWN BY: FA&A
SANITARY SEWER MANHOLE DETAIL	

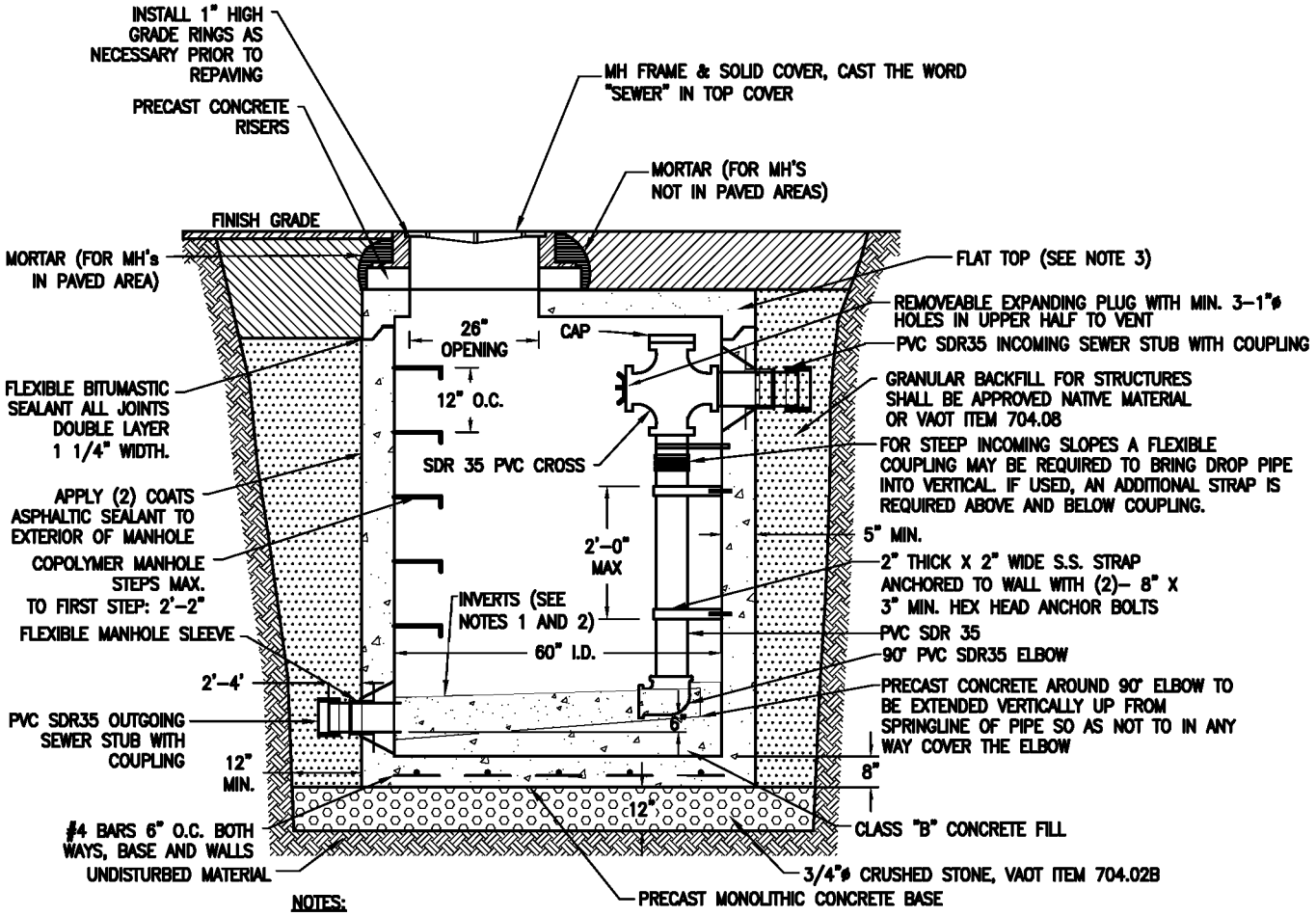

NOTES:

1. INVERTS OF MANHOLE SHALL BE LINED WITH PRECAST CONCRETE.
2. PROVIDE SMOOTH SWEEPING TRANSITIONS BETWEEN INVERTS OF INTERSECTING PIPE.
3. IF DEPTH OF MANHOLE IS 7 FEET OR LESS FROM RIM TO INVERT THEN A FLAT TOP SHALL BE INSTALLED. IF DEPTH OF MANHOLE FROM RIM TO INVERT IS MORE THAN 7 FEET THEN A CONICAL TOP SHALL BE INSTALLED.
4. FOR GRASSED AREAS, PROVIDE 4" LOAM, SEED, AND MULCH. PROVIDE OVERFILL FOR SETTLEMENT.
5. WHERE POSSIBLE, LOCATE INSIDE DROP PIPE NEAR THE MANHOLE ACCESS OPENING WITHOUT PHYSICALLY BLOCKING ACCESS INTO THE MANHOLE.

TOWN OF WILLISTON PUBLIC WORKS DEPARTMENT	
SCALE: NTS	DATE: APRIL 2010
DRAWING #: B-3	DRAWN BY: FA&A
INSIDE DROP MANHOLE DETAIL	

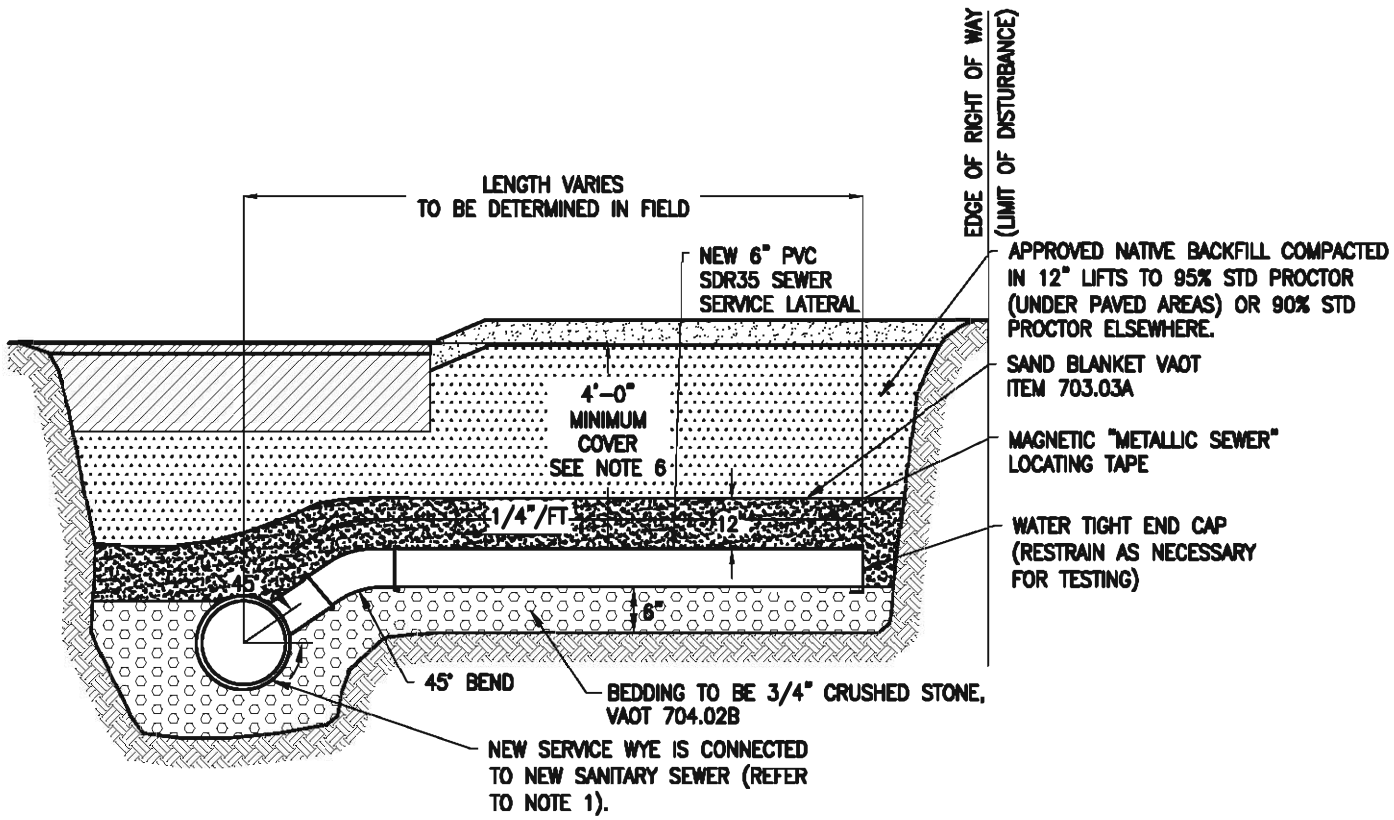

NOTES:

1. ALIGN WYE SO AS THE SERVICE END IS DIRECTED UPSTREAM TO THE SEWAGE FLOW.
2. THREE (3) TIES SHALL BE TAKEN OF THE CAPPED END OF ALL LATERALS. ALSO MARKED WITH A STEEL 4' FENCE POST.
3. EACH NEW SERVICE LATERAL TO BE PRESSURE TESTED ALONG WITH SEWER.
4. EXTEND EACH SERVICE LATERAL TO THE LIMITS SHOWN ON THE DRAWINGS AND RESTRAIN FOR FUTURE CONNECTION.
5. MAINTAIN A CONSTANT SLOPE FROM WYE TO END CAP. MINIMUM SLOPE SHALL BE 1/4"/FT FOR 6" SERVICES.
6. PROVIDE INSULATION AS FOLLOWS.
   A. FOR PLOWED AREAS WHERE 5' OF COVER CANNOT BE MAINTAINED.
   B. FOR UNPLOWED AREAS WHERE 4' OF COVER CANNOT BE MAINTAINED.

TOWN OF WILLISTON PUBLIC WORKS DEPARTMENT	
SCALE: **NTS**	DATE: **APRIL 2010**
DRAWING #: **B-4**	DRAWN BY: **FA&A**
SANITARY SEWER SERVICE DETAIL	

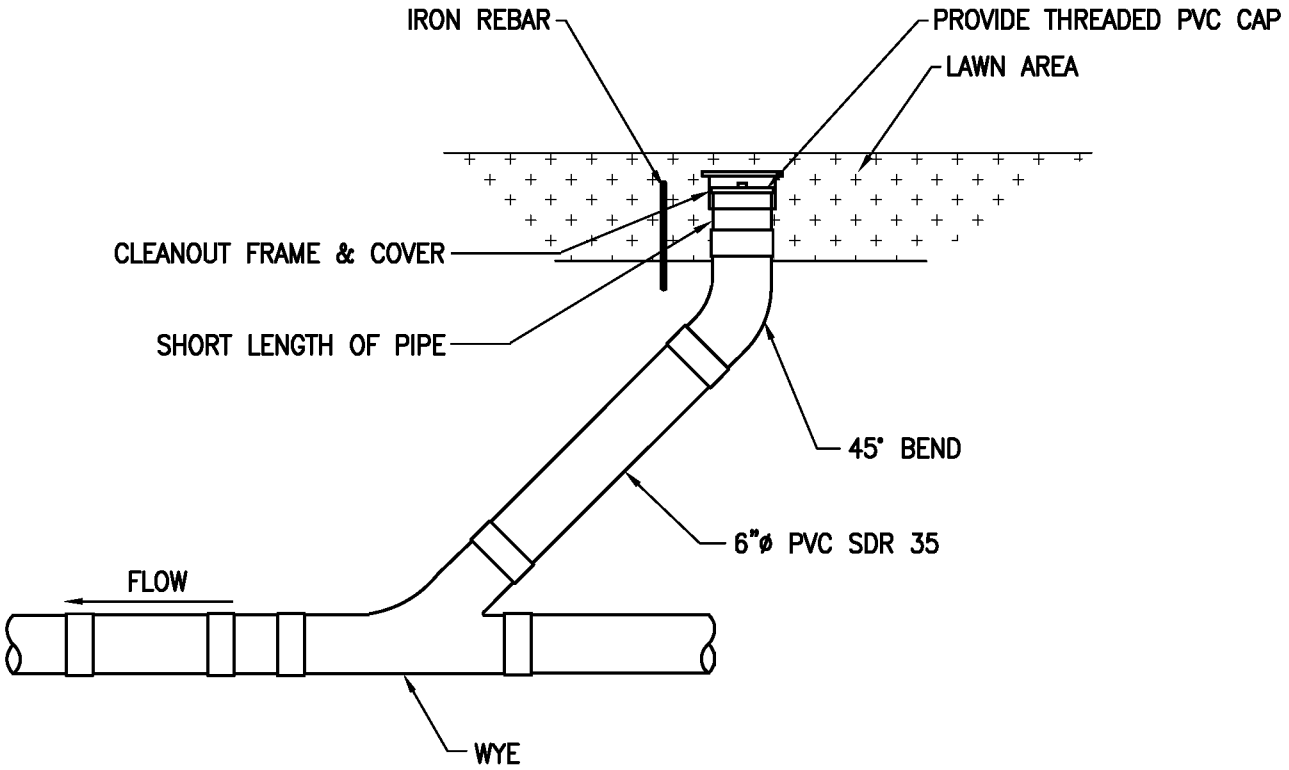

TOWN OF WILLISTON PUBLIC WORKS DEPARTMENT	
SCALE: NTS	DATE: APRIL 2010
DRAWING #: B–5	DRAWN BY: FA&A
SANITARY SEWER CLEANOUT DETAIL	

APPENDIX C

WATER DISTRIBUTION DETAILS

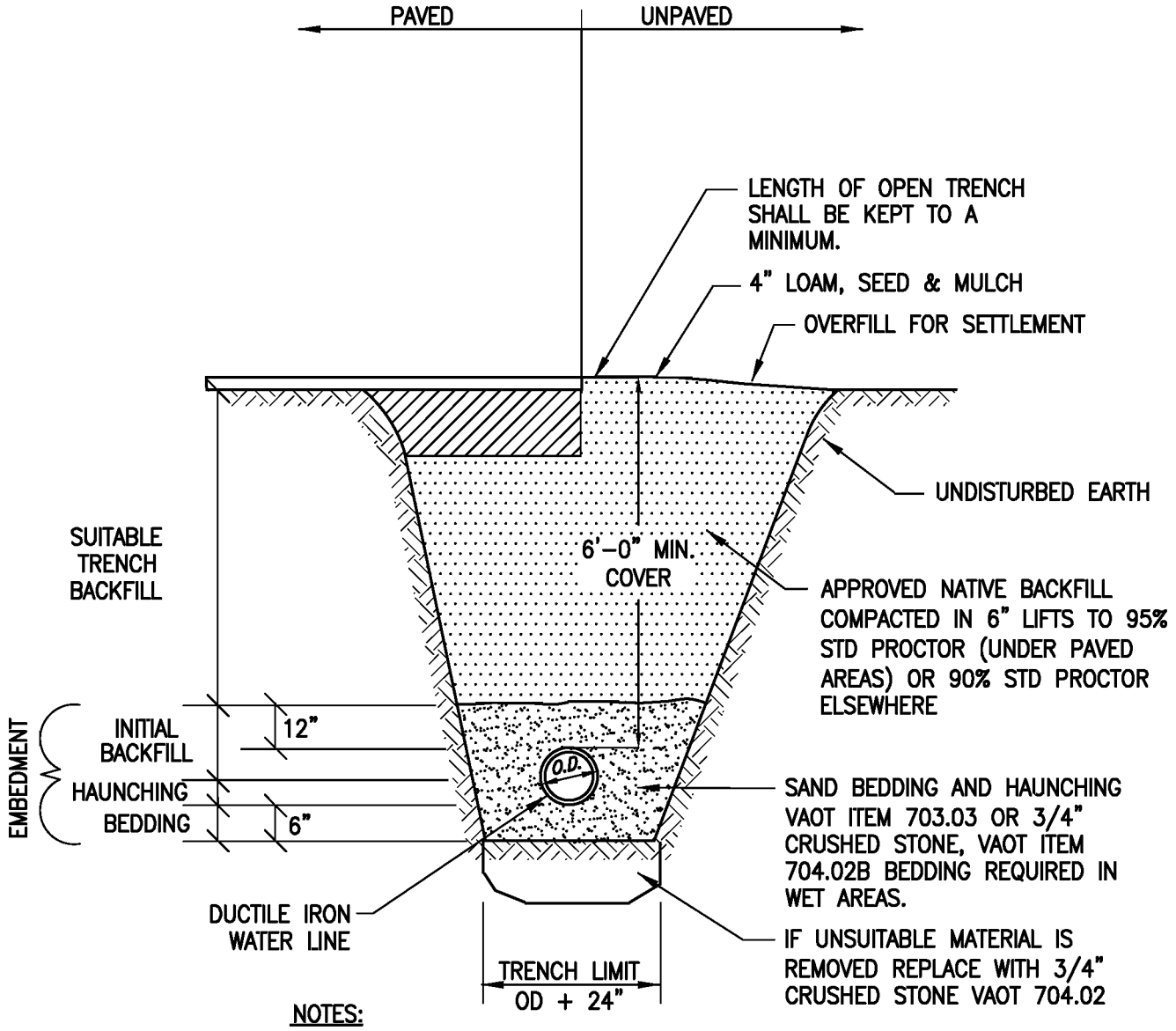

NOTES:

1. NO MECHANICAL TAMPERS SHALL BE USED DIRECTLY OVER PIPE TO INSURE PIPE IS NOT DAMAGED.

2. BEDDING TO PROVIDE A FIRM, STABLE, CONTINUOUS AND UNIFORM SUPPORT FOR THE FULL LENGTH OF PIPE.

TOWN OF WILLISTON PUBLIC WORKS DEPARTMENT	
SCALE: NTS	DATE: APRIL 2010
DRAWING #: C-1	DRAWN BY: FA&A
WATERLINE TRENCH DETAIL	

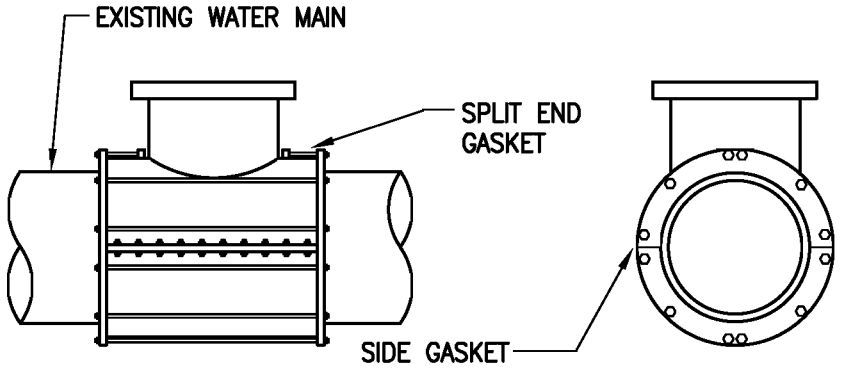

TAPPING SLEEVE

NOTES:

1. SLEEVES SHALL HAVE A MINIMUM WORKING PRESSURE OF 150 PSI.
2. STAINLESS STEEL SLEEVES ALLOWED WITH APPROVAL OF PUBLIC WORKS DIRECTOR.
3. ALL EXTERIOR EXPOSED SURFACES SHALL BE FUSION BOUNDED, EPOXY-COATED TO A MIN. 10 MIL. THICKNESS
4. ALL EXPOSED NUTS AND BOLTS SHALL BE STAINLESS STEEL.

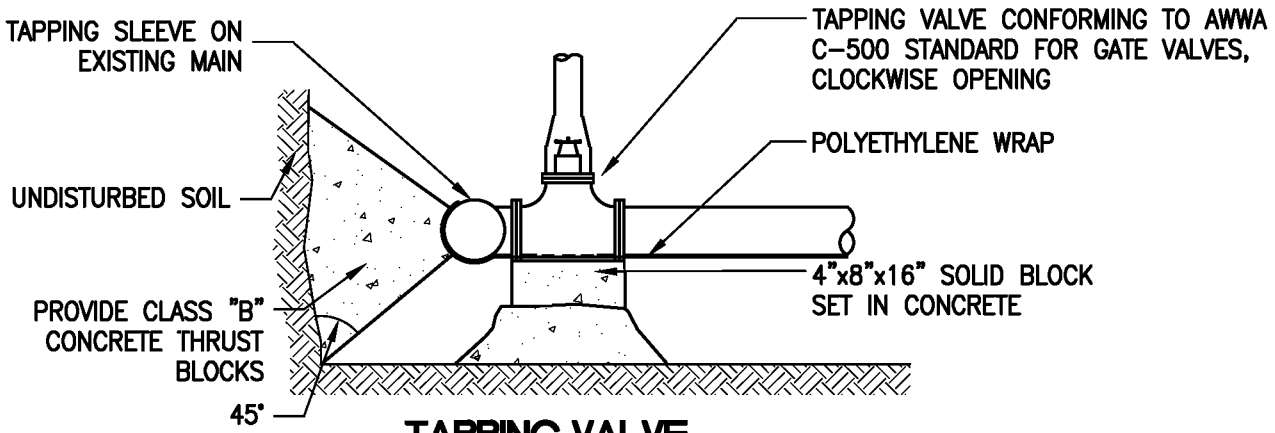

TAPPING VALVE

TOWN OF WILLISTON PUBLIC WORKS DEPARTMENT	
SCALE: **NTS**	DATE: **APRIL 2010**
DRAWING #: **C-2**	DRAWN BY: **FA&A**
TAPPING SLEEVE AND VALVE DETAIL	

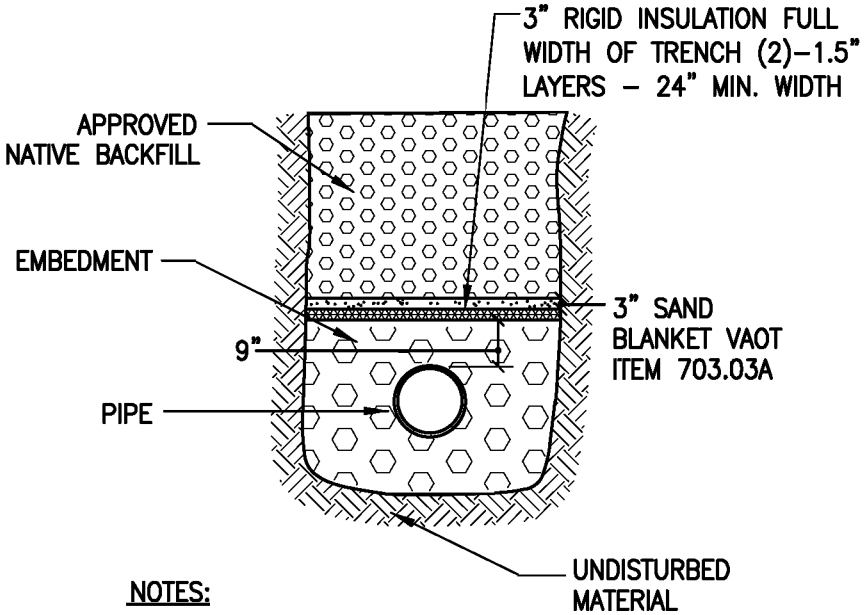

NOTES:

1. STAGGER INSULATION JOINTS SO THAT NO JOINTS OF THE TWO (2) LAYERS ARE ONE OVER THE OTHER.

2. INSULATION TO BE UTILIZED AT ALL LOCATIONS WHERE 5'–0" MINIMUM COVER CANNOT BE MAINTAINED.

TOWN OF WILLISTON PUBLIC WORKS DEPARTMENT	
SCALE: NTS	DATE: APRIL 2010
DRAWING #: C–3	DRAWN BY: FA&A
PIPE TRENCH INSULATION DETAIL	

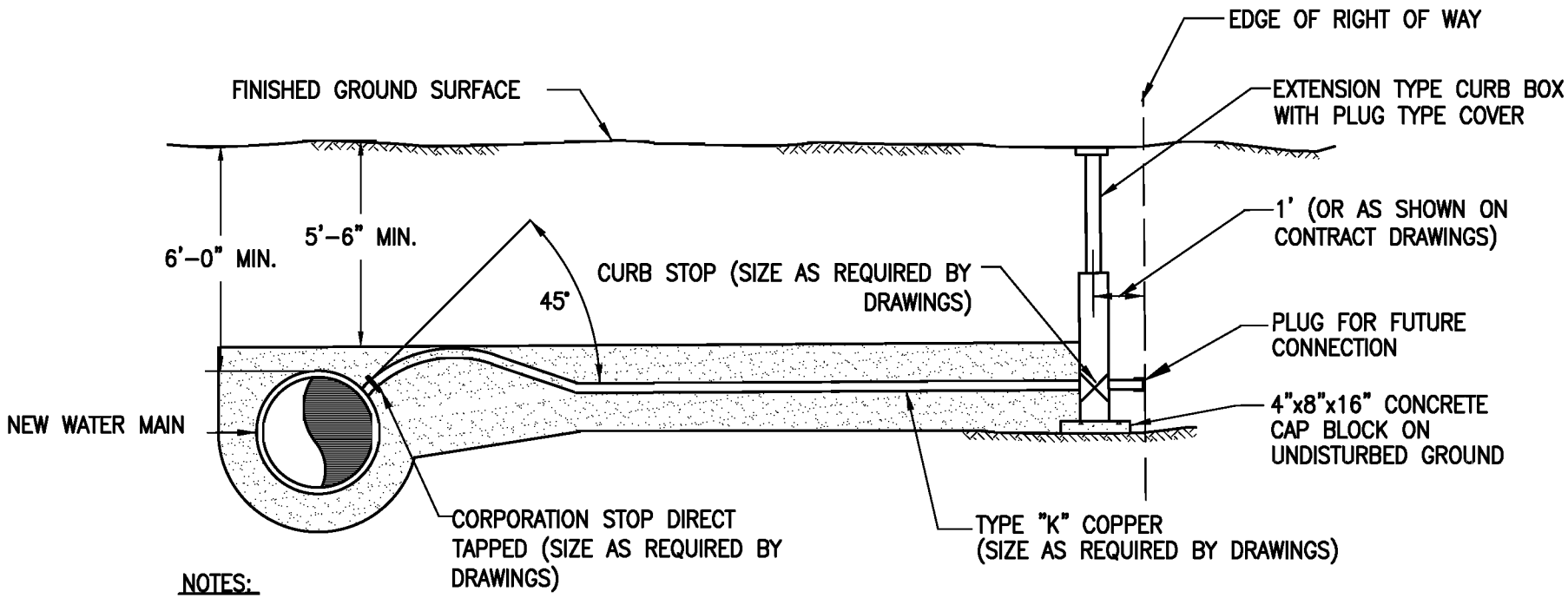

NOTES:

1. TEFLON THREAD SEALANT TAPE SHALL BE USED ON ALL CORPORATION STOPS PRIOR TO INSERTION.
   a. SPIRAL WRAP COMPLETELY COVERING THE THREAD AREA WITH TWO WRAPS.
   b. PIPE DOPE OR OTHER LIQUID THREAD SEALANTS ARE NOT ACCEPTABLE.
2. LEAVE ONE TO THREE THREADS SHOWING OUTSIDE OF PIPE. (A TORQUE OF 35 LBS. OR LESS IS RECOMMENDED).
3. CORPORATION STOPS SHALL NOT BE PLACED LESS THAN 12" APART ALONG PIPE.

TOWN OF WILLISTON PUBLIC WORKS DEPARTMENT	
SCALE: NTS	DATE: APRIL 2010
DRAWING #: C-4	DRAWN BY: FA&A
WATER SERVICE CONNECTION DETAIL	

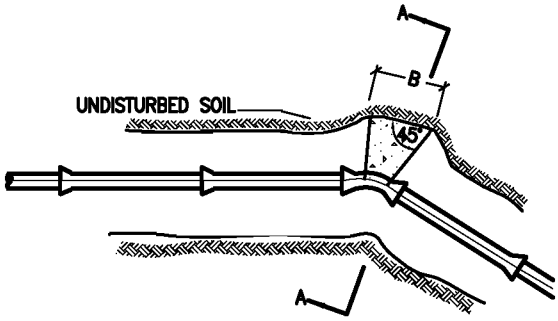

HORIZONTAL BEND

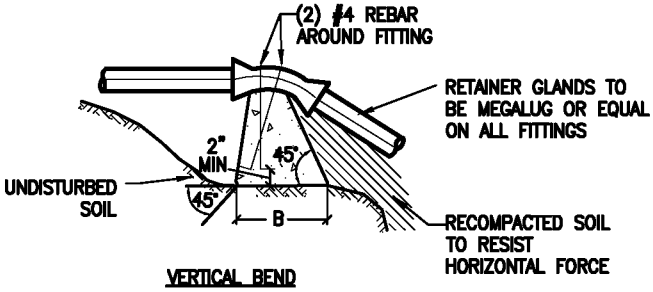

VERTICAL BEND

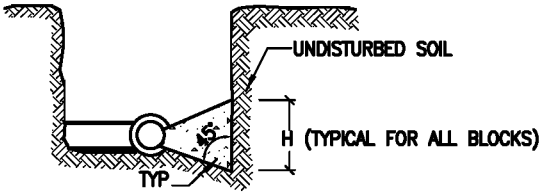

SECTION A-A
SCALE: NONE

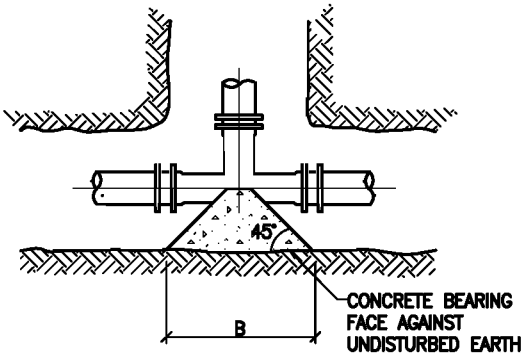

HORIZONTAL TEE/ TAPPING VALVE

NOTES:

1. ALL THRUST BLOCKS SHALL BE CLASS "B" CONCRETE.
2. CONCRETE SHALL BE PLACED SO AS NOT TO HAMPER THE FUTURE REMOVAL OF A FITTING.
3. ALL FITTINGS ARE TO BE WRAPPED WITH POLYETHYLENE.

MINIMUM BEARING FACE
"HEIGHTS AND WIDTHS"
FOR CONCRETE THRUST BLOCKS
(TEST PRESSURE = 150 PSI)

HEIGHT (H) AND WIDTH (B) OF BEARING FACE FOR FITTING TO BE RESTRAINED												
PIPELINE SIZE	11 1/4° BEND		22 1/2° BEND		45° BEND		90° BEND		TEES & PLUGS		WYES	
	H	B	H	B	H	B	H	B	H	B	H	B
6"	1.0	1.0	1.0	1.0	1.0	2.0	1.75	2.0	1.25	2.0	1.0	2.0
8"	1.0	1.0	1.0	1.75	1.5	2.25	1.75	3.5	1.5	3.0	1.5	2.25
12"	1.0	1.5	1.25	2.25	1.75	3.0	2.25	4.25	2.25	3.0	1.75	3.0

NOTES:

1. HYDROSTATIC AND LEAKAGE TEST PRESSURE PER SPECIFICATIONS.
2. UNDISTURBED EARTH. SIDE OF TRENCH OR OTHER EXCAVATION.
3. SEE DIAGRAM FOR H AND B LOCATION REFERENCE. H AND B IN FEET.
4. MINIMUM BEARING FACE IS BASED ON A SOIL TYPE WITH AASHTO CLASSIFICATION OF GROUP A-3 AND A-4 FOR GRANULAR AND SANDY/SILT MATERIALS. OTHER SOIL TYPES MAY REQUIRE AN INCREASE IN THE BEARING FACES, AS IDENTIFIED DURING CONSTRUCTION.

TOWN OF WILLISTON PUBLIC WORKS DEPARTMENT	
SCALE: NTS	DATE: APRIL 2010
DRAWING #: C-5	DRAWN BY: FA&A
THRUST BLOCK DETAILS	

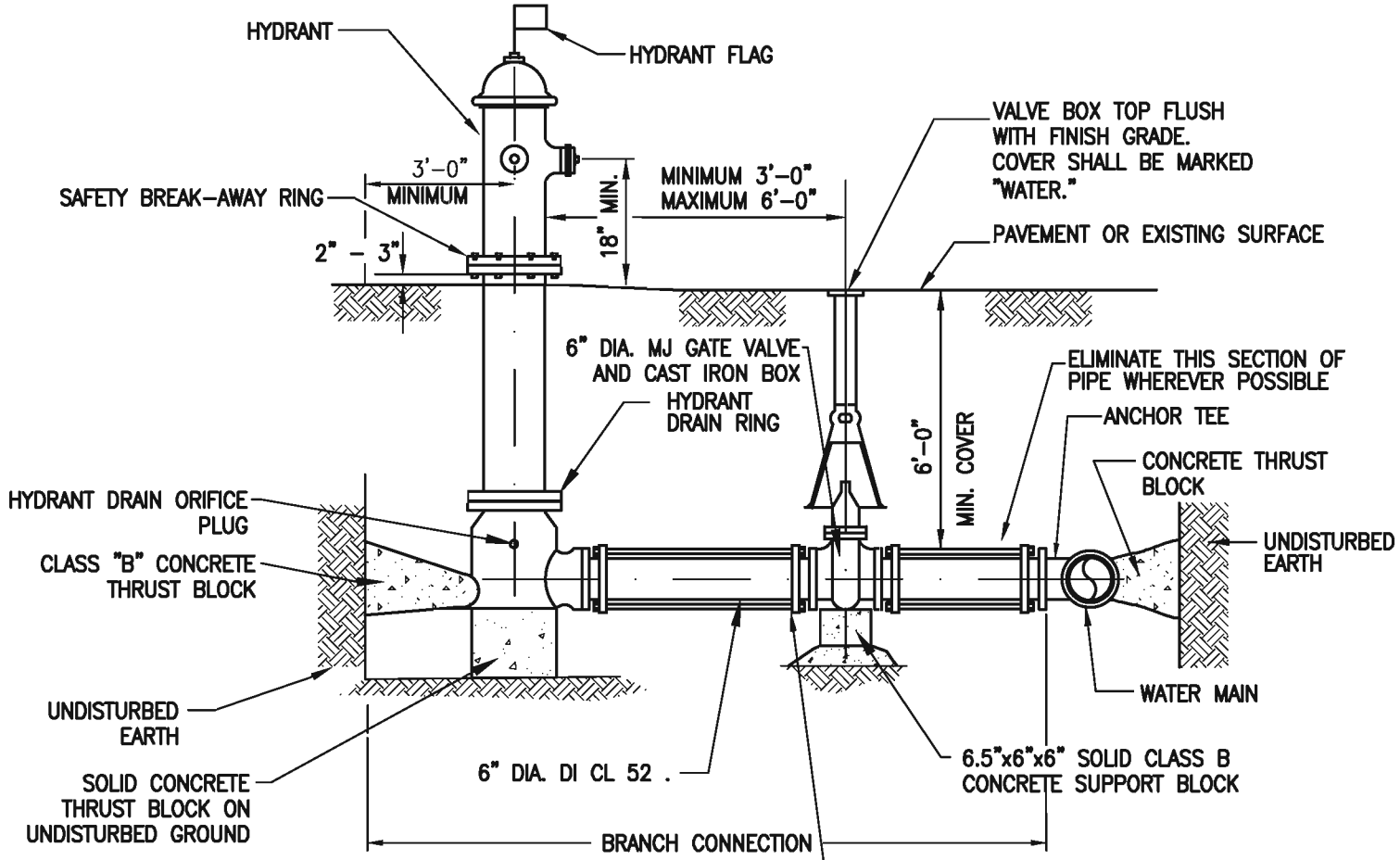

NOTES:

1. BRANCH PIPING AND FITTINGS SHALL BE MECHANICAL JOINT.
2. ALL HYDRANTS SHALL HAVE THE ORIFICES PLUGGED AND SHALL BE LABELED "ND" FOR NON-DRAINING IN 3" HIGH ORANGE PAINTED LETTERS ON THE BONNET FACING THE ROAD.

TOWN OF WILLISTON PUBLIC WORKS DEPARTMENT	
SCALE: NTS	DATE: APRIL 2010
DRAWING #: C-6	DRAWN BY: FA&A
FIRE HYDRANT DETAIL	

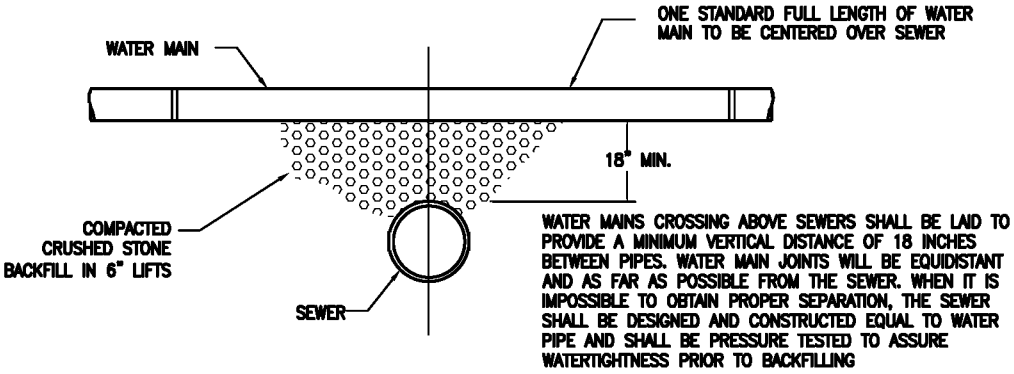

WATER MAIN ABOVE SEWER—PREFERRED METHOD

SCALE: NONE

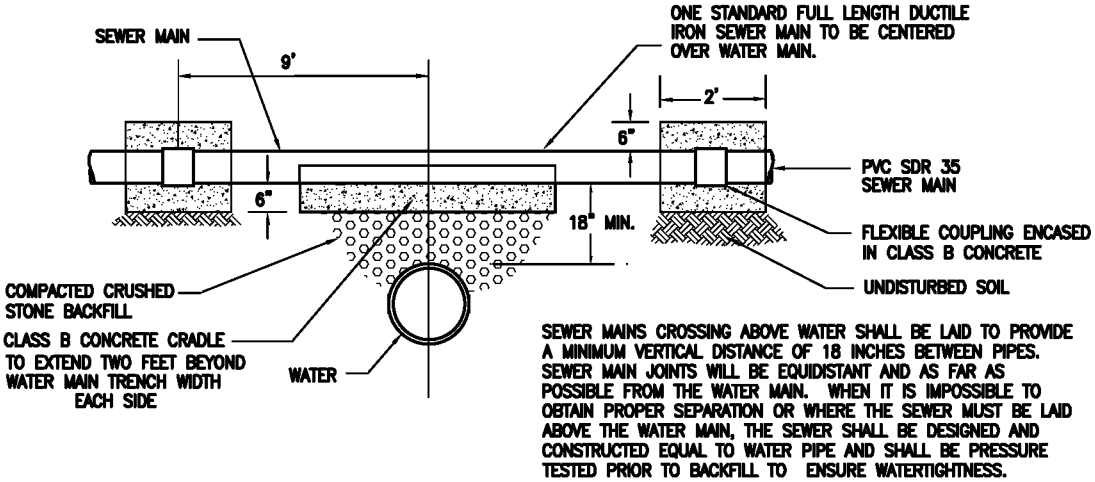

WATER MAIN BELOW SEWER—NOT THE RECOMMENDED METHOD

SCALE: NONE

NOTES:

1. PARALLEL INSTALLATION: WATER MAINS SHALL BE LAID AT LEAST 10 FEET HORIZONTALLY FROM ANY EXISTING OR PROPOSED MANHOLE, SANITARY SEWER OR FORCEMAIN. THIS DISTANCE CAN BE REDUCED TO 5 FEET FOR STORM SEWERS. THE DISTANCE SHALL BE MEASURED EDGE TO EDGE. IF THIS DISTANCE CANNOT BE OBTAINED, THE WATER MAIN SHALL BE LAID IN A SEPARATE TRENCH OR ON AN UNDISTURBED EARTH SHELF LOCATED ON ONE SIDE OF THE SEWER AT SUCH AN ELEVATION THAT THE BOTTOM OF THE WATER MAIN IS AT LEAST 18 INCHES ABOVE THE TOP OF THE SEWER. WHERE SEWERS ARE BEING INSTALLED, AND THE ABOVE SEPARATION CAN NOT BE MET, THE SEWER MATERIALS SHALL BE WATER MAIN PIPE OR EQUAL AND SHALL BE PRESSURE TESTED TO ENSURE WATERTIGHTNESS.

2. CROSSINGS: SEE THE DETAILS ABOVE.

3. SEWER RELATIONS TO WATERMAINS SHALL BE IN ACCORDANCE WITH THE "RECOMMENDED STANDARDS FOR SEWAGE WORKS" SO-CALLED TEN STATE STANDARDS.

4. WATERMAIN TO BE RECONSTRUCTED SHALL BE PUSH-ON OR MJ D.I. CL52 PIPE, AWWA C900 PVC PRESSURE PIPE OR HDPE SDR9 PRESSURE PIPE FOR A DISTANCE OF 10 FEET EACH SIDE OF THE CENTERLINE OF THE SEWER AS APPROVED BY THE ENGINEER.

TOWN OF WILLISTON PUBLIC WORKS DEPARTMENT	
SCALE: NTS	DATE: APRIL 2010
DRAWING #: C-7	DRAWN BY: FA&A
WATER/SEWER SEPARATION DETAILS	

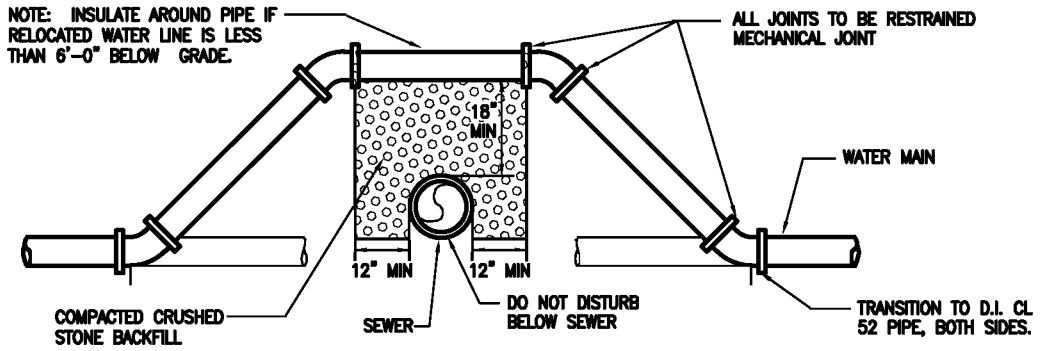

RELOCATION OF WATER MAIN ABOVE SEWER–PREFERRED METHOD

SCALE: NONE

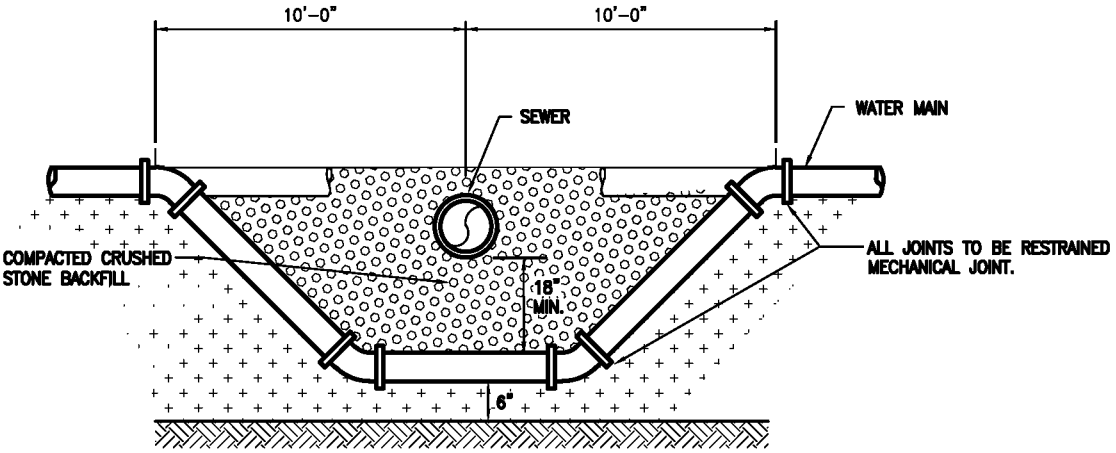

NOTES

1. UNDER NO CIRCUMSTANCES SHALL THE SEWER BE LESS THAN 18" ABOVE THE WATER MAIN.

2. THIS METHOD TO BE USED ONLY IF WATER MAIN CAN NOT GO OVER THE SEWER LINE. IT IS NOT THE RECOMMENDED METHOD.

RELOCATION OF WATER MAIN BELOW SEWER–NOT THE RECOMMENDED METHOD

SCALE: NONE

NOTES:

1. PARALLEL INSTALLATION: WATER MAINS SHALL BE LAID AT LEAST 10 FEET HORIZONTALLY FROM ANY EXISTING OR PROPOSED MANHOLE, SANITARY SEWER OR FORCEMAIN. THIS DISTANCE CAN BE REDUCED TO 5 FEET FOR STORM SEWERS. THE DISTANCE SHALL BE MEASURED EDGE TO EDGE. IF THIS DISTANCE CANNOT BE OBTAINED, THE WATER MAIN SHALL BE LAID IN A SEPARATE TRENCH OR ON AN UNDISTURBED EARTH SHELF LOCATED ON ONE SIDE OF THE SEWER AT SUCH AN ELEVATION THAT THE BOTTOM OF THE WATER MAIN IS AT LEAST 18 INCHES ABOVE THE TOP OF THE SEWER. WHERE SEWERS ARE BEING INSTALLED, AND THE ABOVE SEPARATION CAN NOT BE MET, THE SEWER MATERIALS SHALL BE WATER MAIN PIPE OR EQUAL AND SHALL BE PRESSURE TESTED TO ENSURE WATERTIGHTNESS.

2. CROSSINGS: SEE THE DETAILS ABOVE.

TOWN OF WILLISTON PUBLIC WORKS DEPARTMENT	
SCALE: NTS	DATE: APRIL 2010
DRAWING #: C–8	DRAWN BY: FA&A
WATER/SEWER RELOCATION SEPARATION DETAILS	

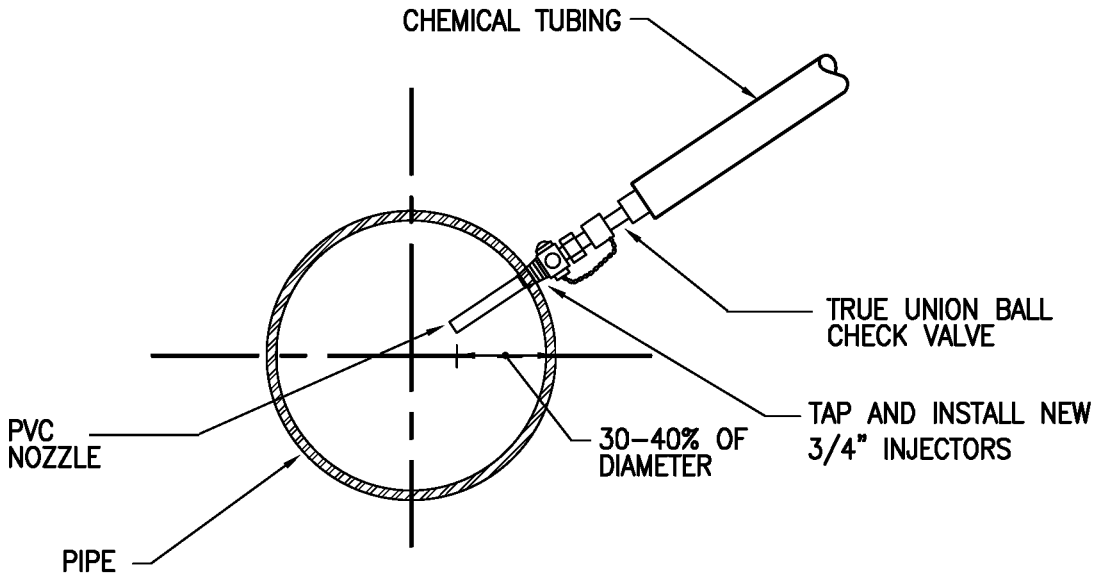

NOTES:

1. ALL INJECTION TAPS AND OTHER THREADED CONNECTIONS SHALL HAVE A MINIMUM OF 3 FULL THREADS AS RECOMMENDED BY MANUFACTURER FOR A 250 PSI WORKING PRESSURE.

TOWN OF WILLISTON PUBLIC WORKS DEPARTMENT	
SCALE: NTS	DATE: MARCH 2013
DRAWING #: C–9	DRAWN BY: A+E
TYPICAL CHLORINE INJECTION POINT	

APPENDIX D

STORM DRAINAGE DETAILS

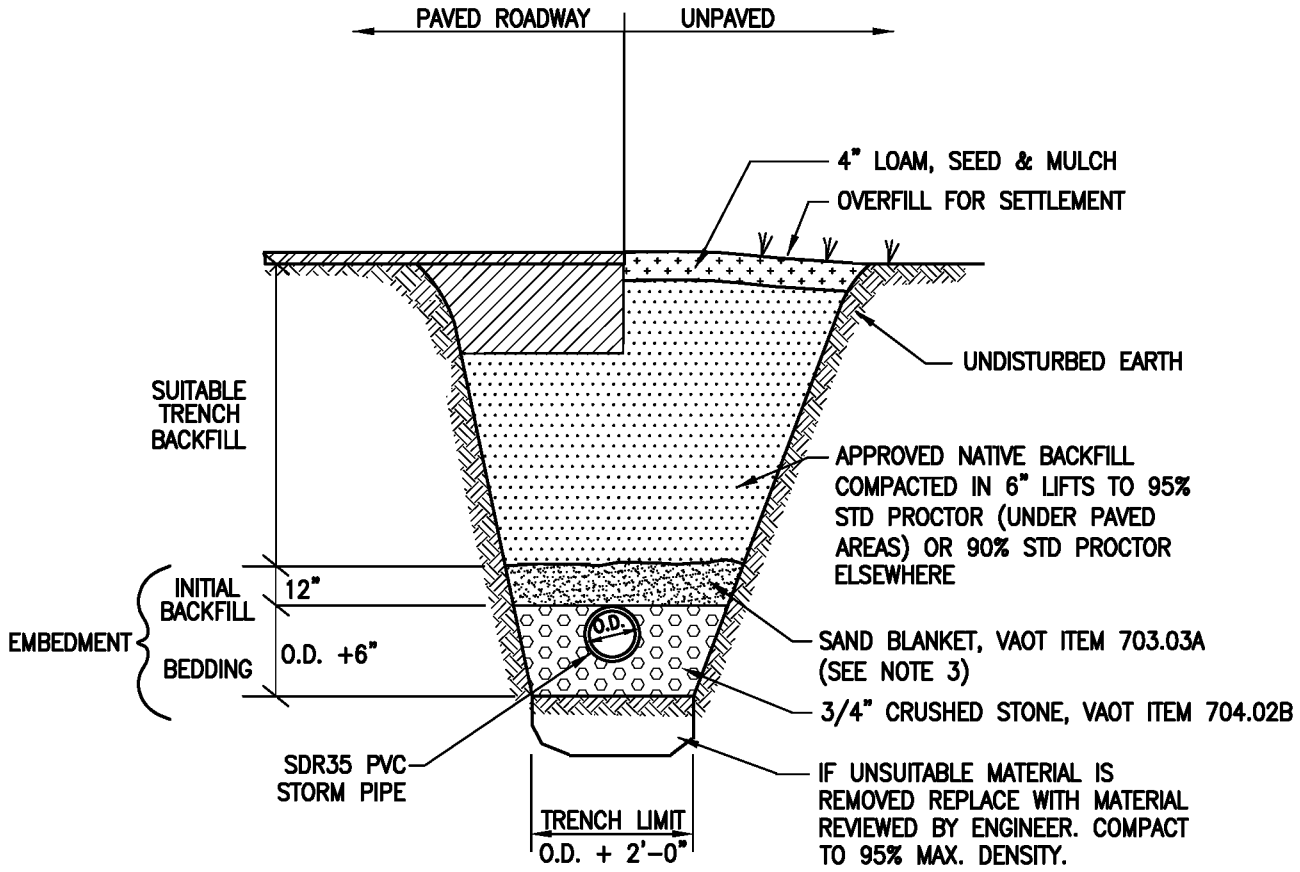

NOTES:

1. NO MECHANICAL TAMPERS SHALL BE USED DIRECTLY OVER PVC PIPE TO ENSURE PIPE IS NOT DAMAGED.
2. BEDDING TO PROVIDE A FIRM, STABLE, CONTINUOUS AND UNIFORM SUPPORT FOR THE FULL LENGTH OF PIPE.
3. FOR INITIAL BACKFILL, CONTRACTOR CAN USE 3/4" CRUSHED STONE OR SAND BORROW.

TOWN OF WILLISTON PUBLIC WORKS DEPARTMENT	
SCALE: NTS	DATE: APRIL 2010
DRAWING #: D-1	DRAWN BY: FA&A
STORM PIPE TRENCH DETAIL	

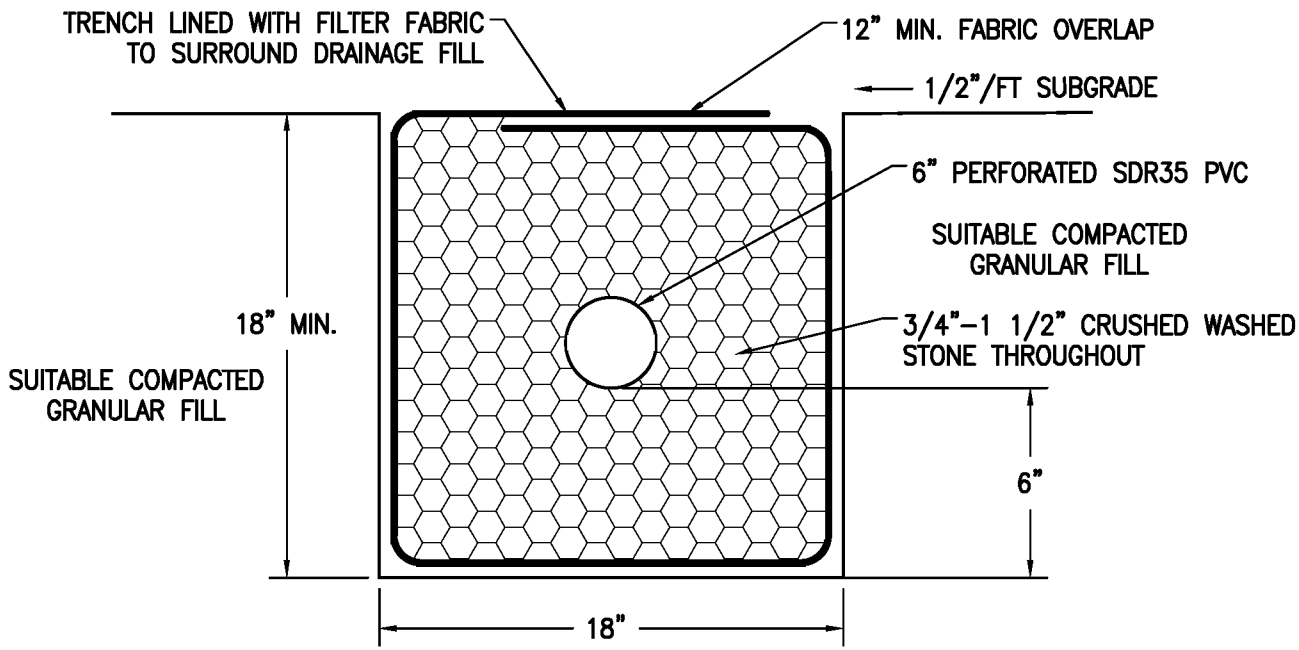

NOTES:

1. SHAPE SUBGRADE TO SLOPE TOWARD UNDERDRAIN TRENCHES. MINIMUM DEPTH 7'–0".

TOWN OF WILLISTON PUBLIC WORKS DEPARTMENT	
SCALE: NTS	DATE: APRIL 2010
DRAWING #: D–2	DRAWN BY: FA&A
TYPICAL UNDERDRAIN DETAIL	

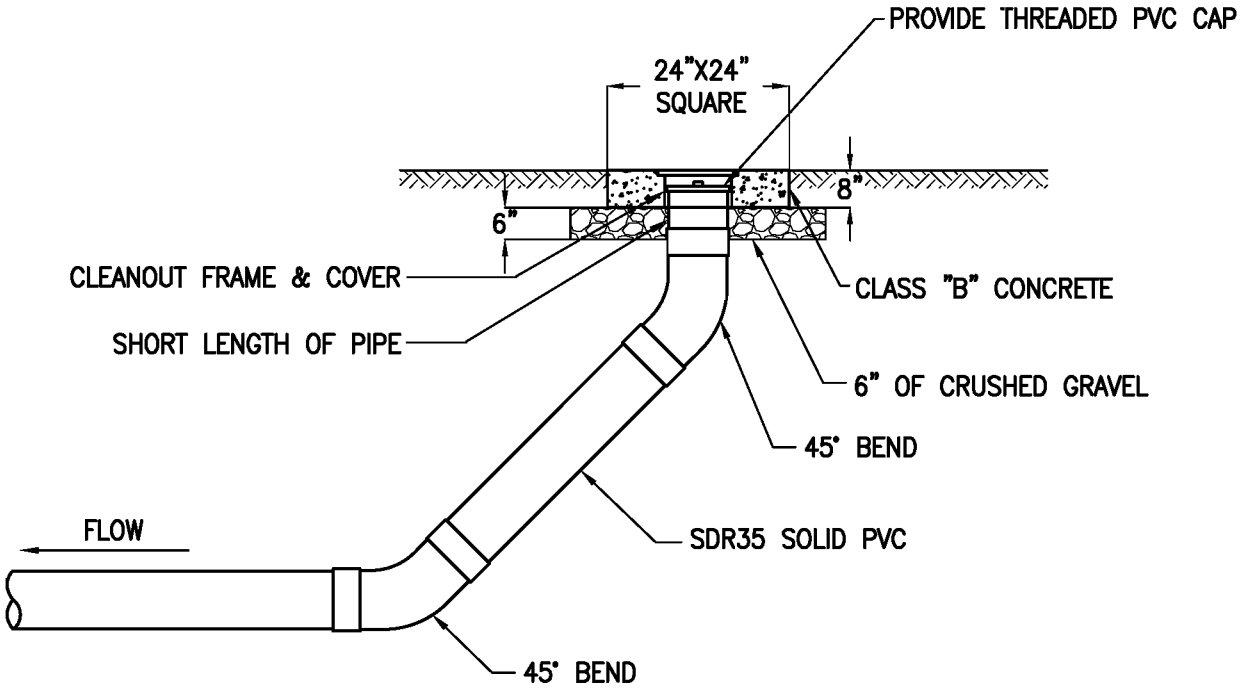

TOWN OF WILLISTON PUBLIC WORKS DEPARTMENT	
SCALE: **NTS**	DATE: **APRIL 2010**
DRAWING #: **D-3**	DRAWN BY: **FA&A**
UNDERDRAIN CLEANOUT DETAIL	

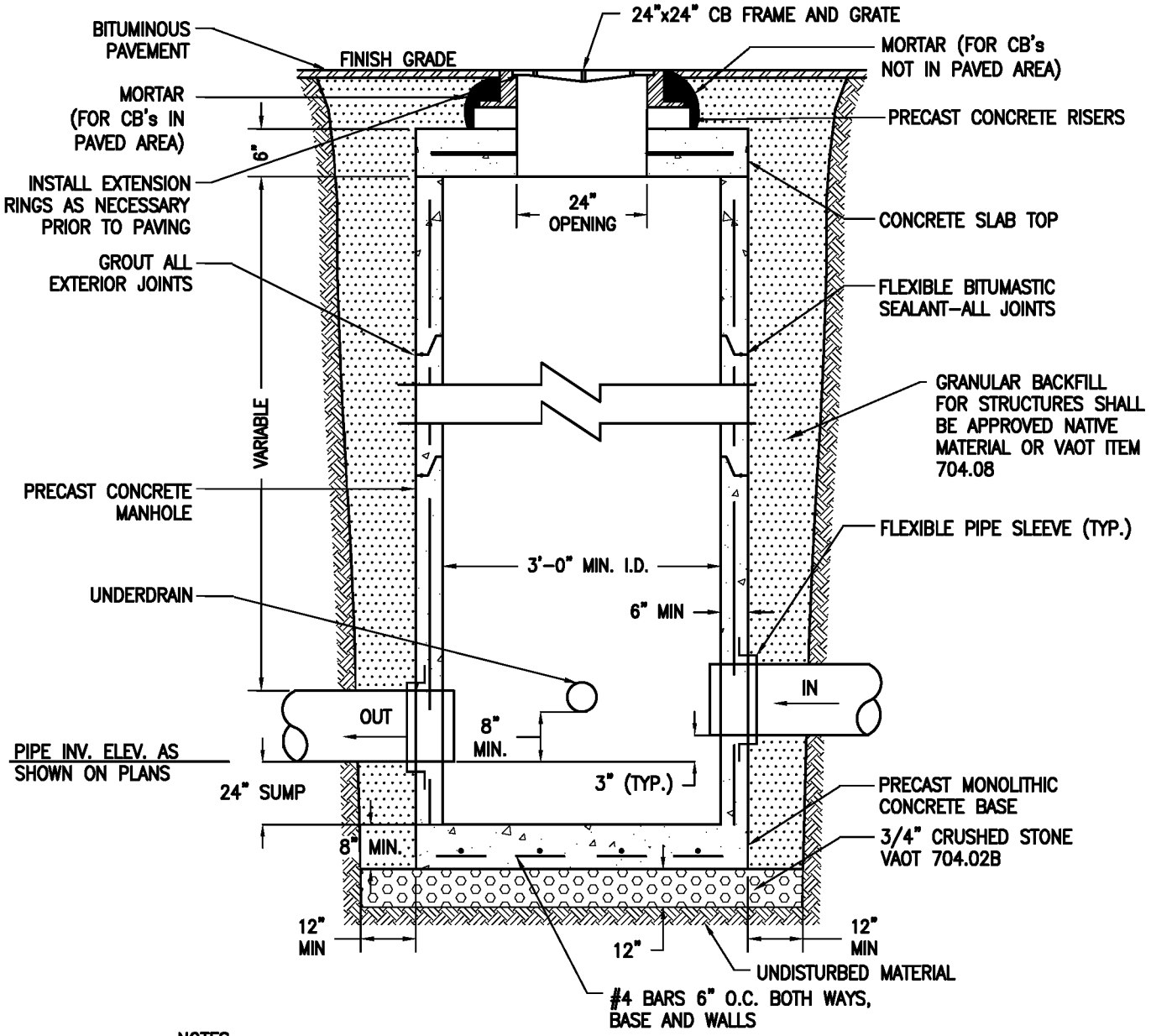

NOTES:

1. PROVIDE FLANGE GRATE AND FRAME.
2. CONCRETE=4,000 psi; STEEL REBAR=40,000 psi
3. STRUCTURES SHALL BE DESIGNED TO WITHSTAND AN H-20 LOADING.

TOWN OF WILLISTON PUBLIC WORKS DEPARTMENT	
SCALE: NTS	DATE: APRIL 2010
DRAWING #: D-4	DRAWN BY: FA&A
CATCH BASIN DETAIL	

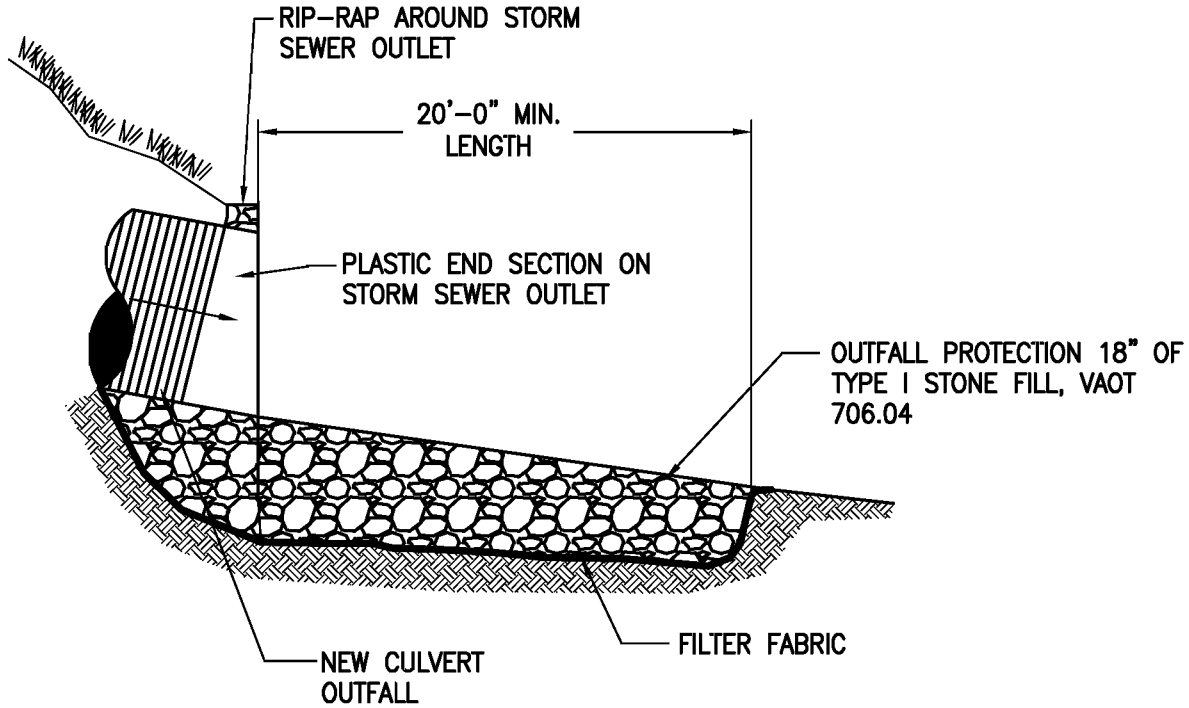

NOTES:

1. PROVIDE MINIMUM 10' WIDTH OF RIP-RAP OR DIA. x5 WHICHEVER IS GREATER.

ADVANCED DRAINAGE SYSTEMS, Inc. FLARED END SECTIONS, OR EQUAL						
PART#	PIPE SIZE	A	B (MAX)	H	L	W
1210NP	12 in. (300 mm)	6.5 in. (165 mm)	10.0 in. (254 mm)	6.5 in. (165 mm)	25.0 in. (635 mm)	29.0 in. (737 mm)
1510NP	15 in. (375 mm)	6.5 in. (165 mm)	10.0 in (254 mm)	6.5 in. (165 mm)	25.0 in. (635 mm)	29.0 in. (737 mm)
1810NP	18 in. (450 mm)	7.5 in. (191 mm)	15.0 in. (381 mm)	6.5 in. (165 mm)	32 in. (813 mm)	35.0 in. (889 mm)
2410NP	24 in. (600 mm)	7.5 in. (191 mm)	18.0 in. (457 mm)	6.5 in. (165 mm)	36 in. (914 mm)	45.0 in. (1143 mm)
3015NP	30 in. (750 mm)	7.5 in. (191 mm)	12.0 in. (305 mm)	8.6 in. (218 mm)	58.0 in. (1473 mm)	63.0 in. (1600 mm)
3615NP	36 in. (900 mm)	7.5 in. (191 mm)	25.0 in. (635 mm)	8.6 in. (218 mm)	58.0 in. (1473 mm)	63.0 in. (1600 mm)

TOWN OF WILLISTON PUBLIC WORKS DEPARTMENT	
SCALE: NTS	DATE: APRIL 2010
DRAWING #: D-5	DRAWN BY: FA&A
STORM SEWER OUTFALL DETAIL	

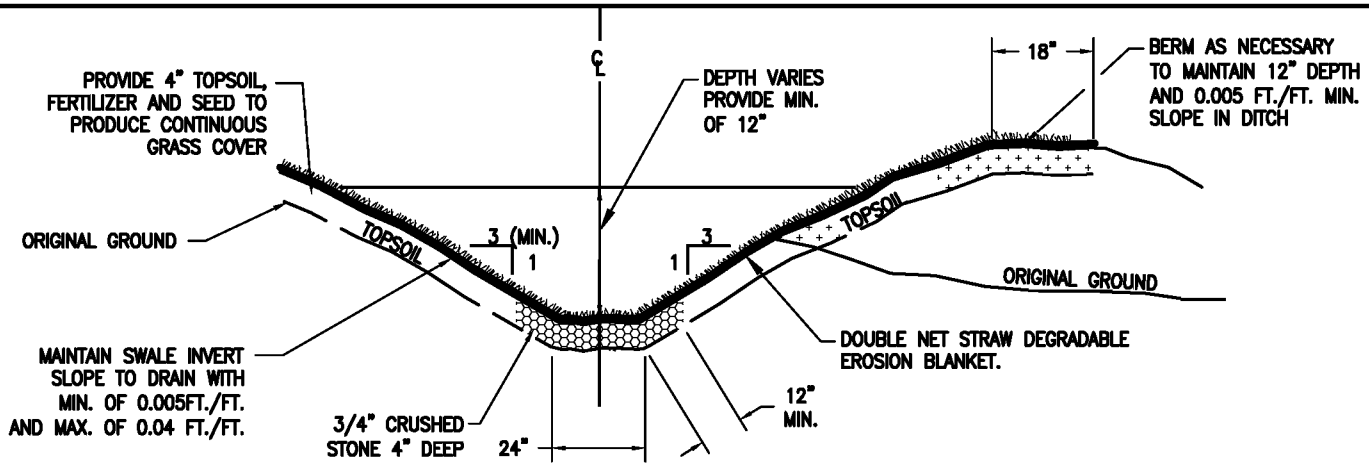

NOTES:

1. INSTALL DEGRADABLE EROSION BLANKET PER MANUFACTURER'S REQUIREMENTS. UTILIZE BIODEGRADABLE STAKES. WIRE STAPLES ARE NOT ACCEPTABLE.
2. CONTRACTOR SHALL USE EROSION BLANKET ON ALL DISTURBED GRASSED DRAINAGE SWALES.
3. INSPECT GRASSED DRAINAGE SWALES AT LEAST ONCE A WEEK AND WITHIN 24 HOURS AFTER EACH RAINFALL. MAINTENANCE SHALL BE PERFORMED AS NEEDED. INSPECTIONS SHALL CONTINUE UNTIL GRASS IS FULLY ESTABLISHED.

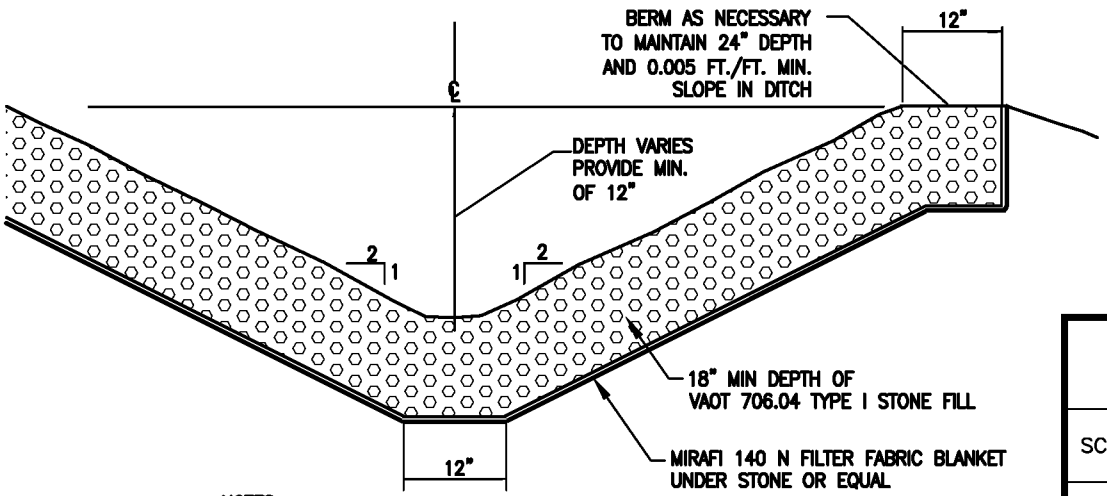

NOTES:

1. DRAINAGE SWALES WITH A SLOPE GREATER THAN 4% SHALL BE STONE LINED, UNLESS OTHERWISE NOTED.

TOWN OF WILLISTON PUBLIC WORKS DEPARTMENT	
SCALE: NTS	DATE: APRIL 2010
DRAWING #: D-6	DRAWN BY: FA&A
GRASSED AND STONE LINED DRAINAGE SWALE DETAIL	

APPENDIX E

STREET DETAILS

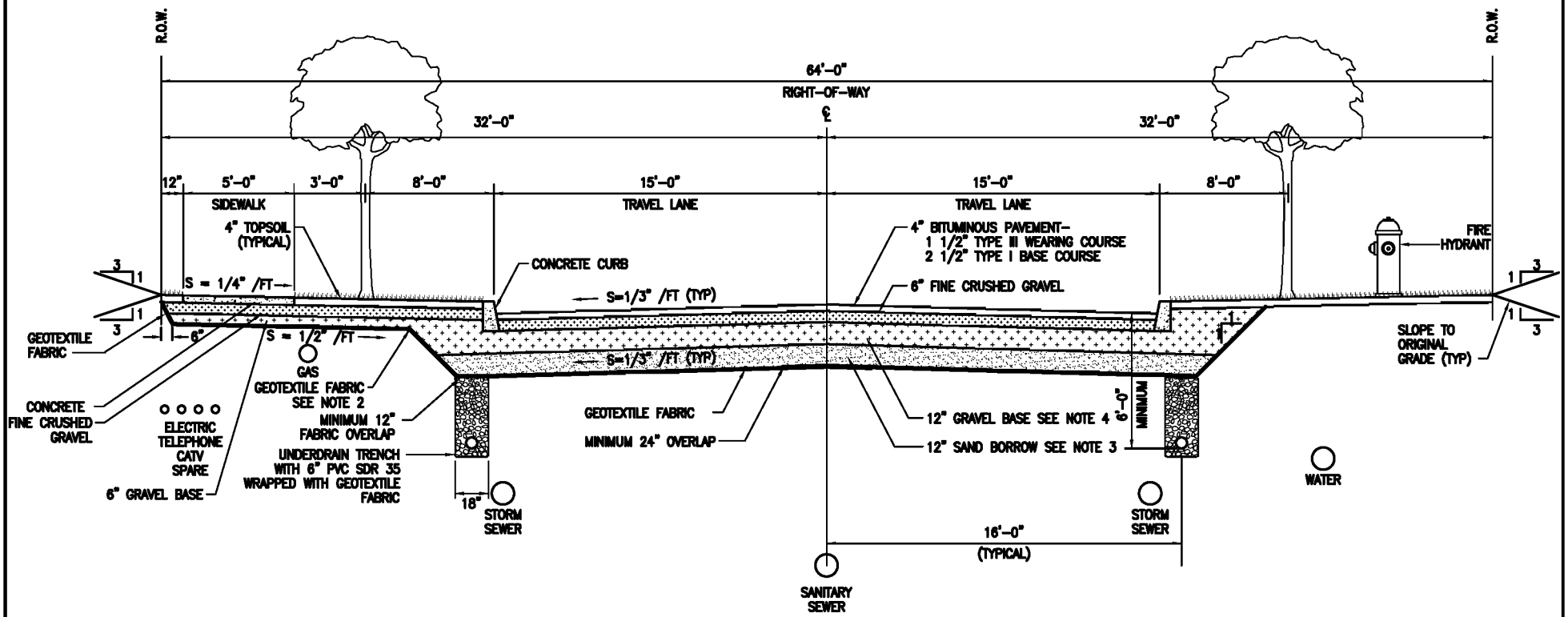

NOTES:

1. THE MATERIAL SUBBASE DEPTHS SHOWN ARE MINIMUM REQUIREMENTS. INVESTIGATION OF EXISTING SOIL CONDITIONS IS REQUIRED, AND DEPENDING ON EXISTING SOIL CONDITIONS, THE SUBBASE DEPTHS MAY CHANGE IF RECOMMENDED BY AN INDEPENDENT GEOTECHNICAL ENGINEER.
2. GEOTEXTILE FABRICS SHALL MEET THE REQUIREMENTS OF VAOT SECTION 720 FOR ROADBED SUBGRADE AND UNDERDRAIN TRENCHES.
3. SAND BORROW SHALL MEET THE REQUIREMENTS OF VAOT SUBSECTION 703.03.
4. GRAVEL BASE SHALL MEET THE REQUIREMENTS OF VAOT SUBSECTION 704.04.
5. FINE CRUSHED GRAVEL SHALL MEET THE REQUIREMENTS OF VAOT SUBSECTION 704.05.
6. CRUSHED WASHED STONE SHALL MEET THE REQUIREMENTS OF VAOT SUBSECTION 704.10.

TOWN OF WILLISTON PUBLIC WORKS DEPARTMENT	
SCALE: NTS	DATE: MARCH 2010
DRAWING #: E-1	DRAWN BY: FA&A
DENSE RESIDENTIAL (COLLECTOR)/SIDEWALK TYPICAL STREET SECTION	

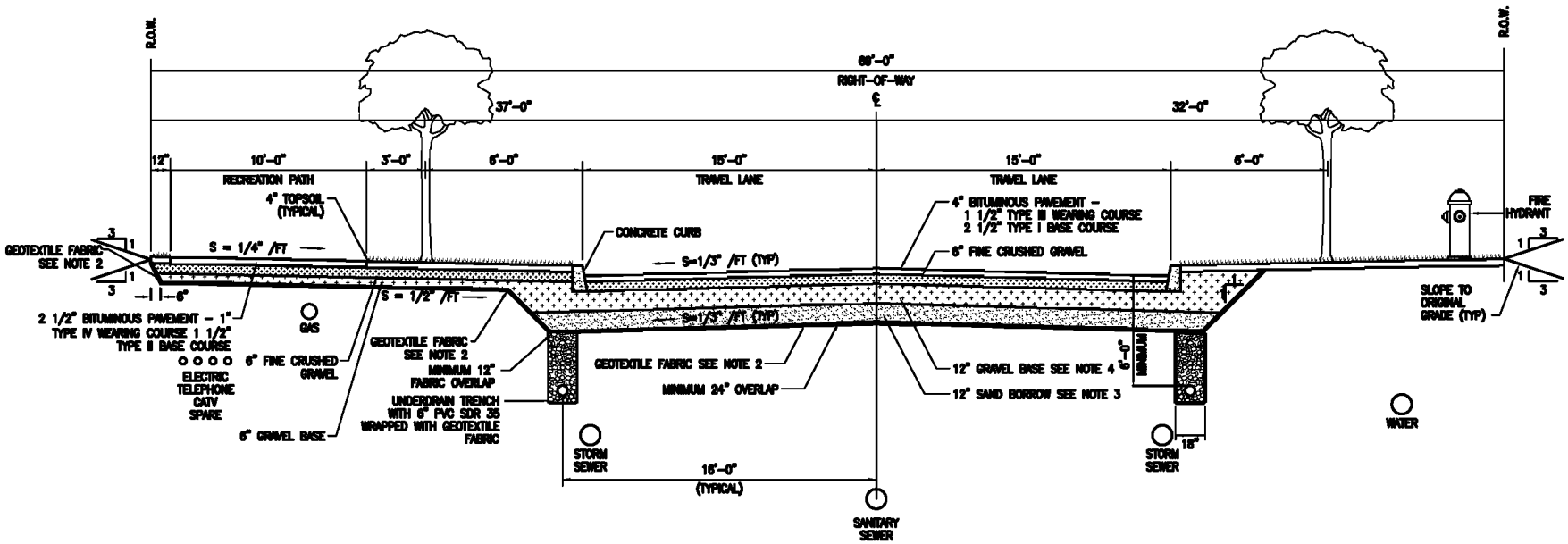

NOTES:

1. THE MATERIAL SUBBASE DEPTHS SHOWN ARE MINIMUM REQUIREMENTS. INVESTIGATION OF EXISTING SOIL CONDITIONS IS REQUIRED, AND DEPENDING ON EXISTING SOIL CONDITIONS, THE SUBBASE DEPTHS MAY CHANGE IF RECOMMENDED BY AN INDEPENDENT GEOTECHNICAL ENGINEER.
2. GEOTEXTILE FABRICS SHALL MEET THE REQUIREMENTS OF VAOT SECTION 720 FOR ROADBED SUBGRADE AND UNDERDRAIN TRENCHES.
3. SAND BORROW SHALL MEET THE REQUIREMENTS OF VAOT SUBSECTION 703.03.
4. GRAVEL BASE SHALL MEET THE REQUIREMENTS OF VAOT SUBSECTION 704.04.
5. FINE CRUSHED GRAVEL SHALL MEET THE REQUIREMENTS OF VAOT SUBSECTION 704.05.
6. CRUSHED WASHED STONE SHALL MEET THE REQUIREMENTS OF VAOT SUBSECTION 704.10.

TOWN OF WILLISTON PUBLIC WORKS DEPARTMENT	
SCALE: NTS	DATE: APRIL 2010
DRAWING #: E-2	DRAWN BY: FA&A
DENSE RESIDENTIAL (COLLECTOR)/RECREATION PATH TYPICAL STREET SECTION	

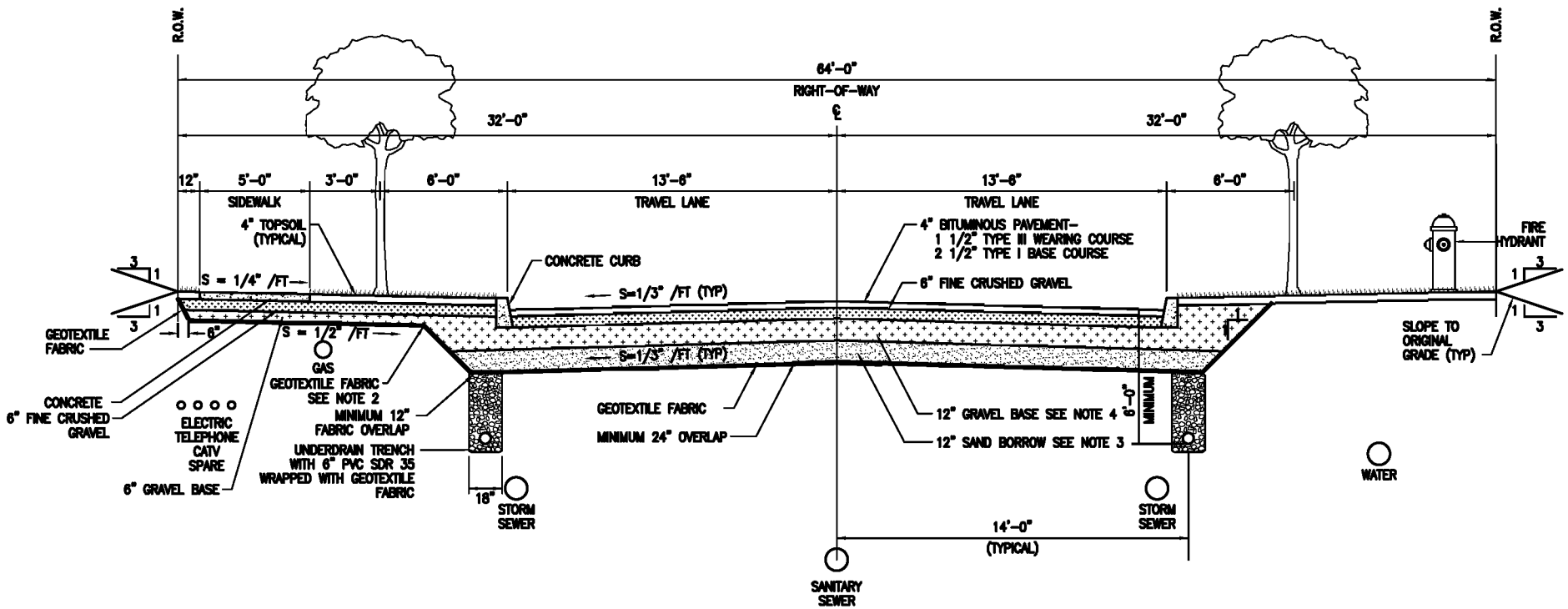

NOTES:

1. THE MATERIAL SUBBASE DEPTHS SHOWN ARE MINIMUM REQUIREMENTS. INVESTIGATION OF EXISTING SOIL CONDITIONS IS REQUIRED, AND DEPENDING ON EXISTING SOIL CONDITIONS, THE SUBBASE DEPTHS MAY CHANGE IF RECOMMENDED BY AN INDEPENDENT GEOTECHNICAL ENGINEER.
2. GEOTEXTILE FABRICS SHALL MEET THE REQUIREMENTS OF VAOT SECTION 720 FOR ROADBED SUBGRADE AND UNDERDRAIN TRENCHES.
3. SAND BORROW SHALL MEET THE REQUIREMENTS OF VAOT SUBSECTION 703.03.
4. GRAVEL BASE SHALL MEET THE REQUIREMENTS OF VAOT SUBSECTION 704.04.
5. FINE CRUSHED GRAVEL SHALL MEET THE REQUIREMENTS OF VAOT SUBSECTION 704.05.
6. CRUSHED WASHED STONE SHALL MEET THE REQUIREMENTS OF VAOT SUBSECTION 704.10.

TOWN OF WILLISTON PUBLIC WORKS DEPARTMENT	
SCALE: NTS	DATE: APRIL 2010
DRAWING #: E-3	DRAWN BY: FA&A
DENSE RESIDENTIAL (MINOR) TYPICAL STREET SECTION	

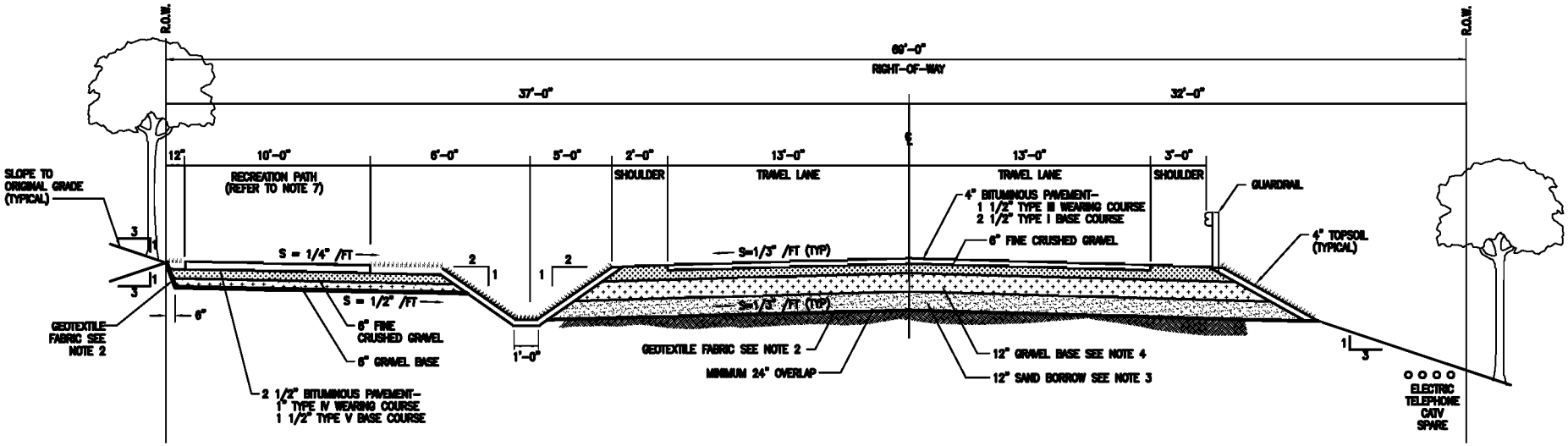

NOTES:

1. THE MATERIAL SUBBASE DEPTHS SHOWN ARE MINIMUM REQUIREMENTS. INVESTIGATION OF EXISTING SOIL CONDITIONS IS REQUIRED, AND DEPENDING ON EXISTING SOIL CONDITIONS, THE SUBBASE DEPTHS MAY CHANGE IF RECOMMENDED BY AN INDEPENDENT GEOTECHNICAL ENGINEER.
2. GEOTEXTILE FABRICS SHALL MEET THE REQUIREMENTS OF VAOT SECTION 720 FOR ROADBED SUBGRADE AND UNDERDRAIN TRENCHES.
3. SAND BORROW SHALL MEET THE REQUIREMENTS OF VAOT SUBSECTION 703.03.
4. GRAVEL BASE SHALL MEET THE REQUIREMENTS OF VAOT SUBSECTION 704.04.
5. FINE CRUSHED GRAVEL SHALL MEET THE REQUIREMENTS OF VAOT SUBSECTION 704.05.
6. CRUSHED WASHED STONE SHALL MEET THE REQUIREMENTS OF VAOT SUBSECTION 704.10.
7. AS DETERMINED BY THE PLANNING COMMISSION (CONSTRUCTION ONLY).

TOWN OF WILLISTON PUBLIC WORKS DEPARTMENT	
SCALE: NTS	DATE: APRIL 2010
DRAWING #: E-4	DRAWN BY: FA&A
RURAL RESIDENTIAL TYPICAL STREET SECTION	

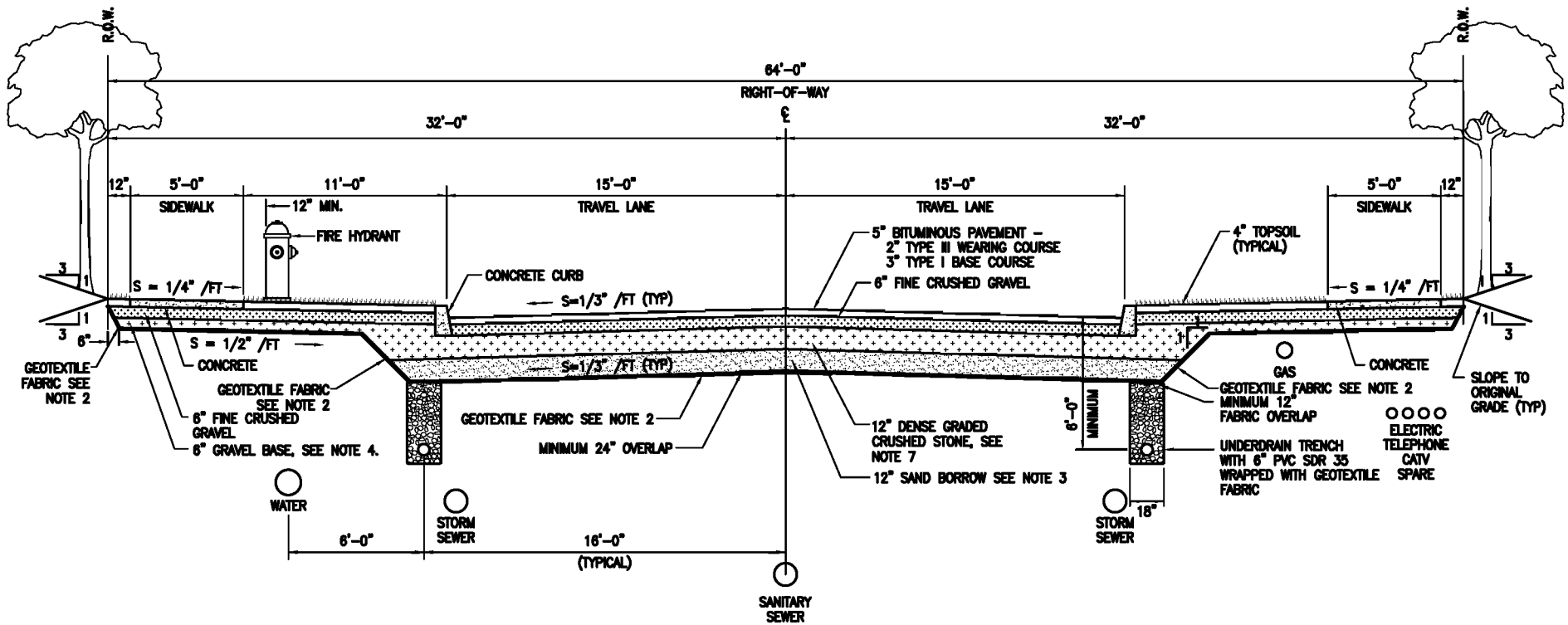

NOTES:

1. THE MATERIAL SUBBASE DEPTHS SHOWN ARE MINIMUM REQUIREMENTS. INVESTIGATION OF EXISTING SOIL CONDITIONS IS REQUIRED, AND DEPENDING ON EXISTING SOIL CONDITIONS, THE SUBBASE DEPTHS MAY CHANGE IF RECOMMENDED BY AN INDEPENDENT GEOTECHNICAL ENGINEER.
2. GEOTEXTILE FABRICS SHALL MEET THE REQUIREMENTS OF VAOT SECTION 720 FOR ROADBED SUBGRADE AND UNDERDRAIN TRENCHES.
3. SAND BORROW SHALL MEET THE REQUIREMENTS OF VAOT SUBSECTION 703.03.
4. GRAVEL BASE SHALL MEET THE REQUIREMENTS OF VAOT SUBSECTION 704.04.
5. FINE CRUSHED GRAVEL SHALL MEET THE REQUIREMENTS OF VAOT SUBSECTION 704.05.
6. CRUSHED WASHED STONE SHALL MEET THE REQUIREMENTS OF VAOT SUBSECTION 704.10.
7. DENSE GRADED CRUSHED STONE SHALL MEET THE REQUIREMENTS OF VAOT SUBSECTION 704.06.

TOWN OF WILLISTON PUBLIC WORKS DEPARTMENT	
SCALE: NTS	DATE: APRIL 2010
DRAWING #: E-5	DRAWN BY: FA&A
COMMERCIAL/INDUSTRIAL TYPICAL STREET SECTION	

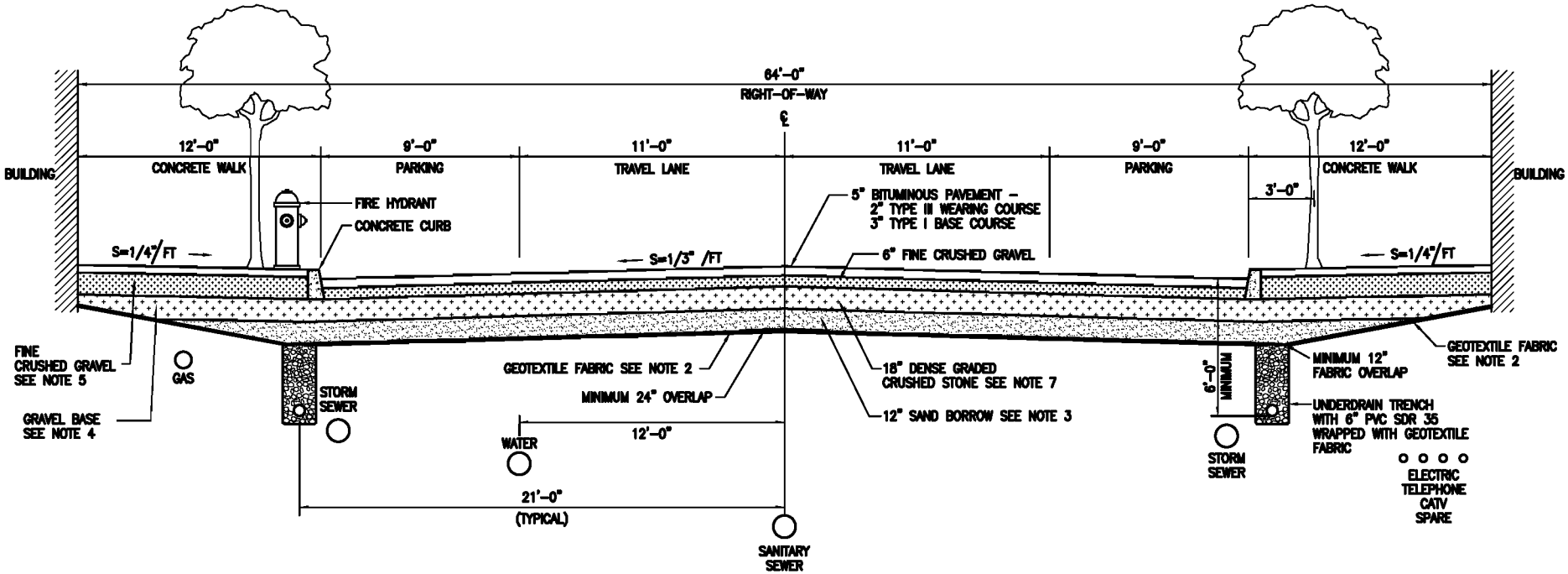

NOTES:

1. THE MATERIAL SUBBASE DEPTHS SHOWN ARE MINIMUM REQUIREMENTS. INVESTIGATION OF EXISTING SOIL CONDITIONS IS REQUIRED, AND DEPENDING ON EXISTING SOIL CONDITIONS, THE SUBBASE DEPTHS MAY CHANGE IF RECOMMENDED BY AN INDEPENDENT GEOTECHNICAL ENGINEER.
2. GEOTEXTILE FABRICS SHALL MEET THE REQUIREMENTS OF VAOT SECTION 720 FOR ROADBED SUBGRADE AND UNDERDRAIN TRENCHES.
3. SAND BORROW SHALL MEET THE REQUIREMENTS OF VAOT SUBSECTION 703.03.
4. GRAVEL BASE SHALL MEET THE REQUIREMENTS OF VAOT SUBSECTION 704.04.
5. FINE CRUSHED GRAVEL SHALL MEET THE REQUIREMENTS OF VAOT SUBSECTION 704.05.
6. CRUSHED WASHED STONE SHALL MEET THE REQUIREMENTS OF VAOT SUBSECTION 704.10.
7. DENSE GRADED CRUSHED STONE SHALL MEET THE REQUIREMENTS OF VAOT SUBSECTION 704.06.

TOWN OF WILLISTON PUBLIC WORKS DEPARTMENT	
SCALE: NTS	DATE: APRIL 2010
DRAWING #: E-6	DRAWN BY: FA&A
TYPICAL URBAN STREET SECTION	

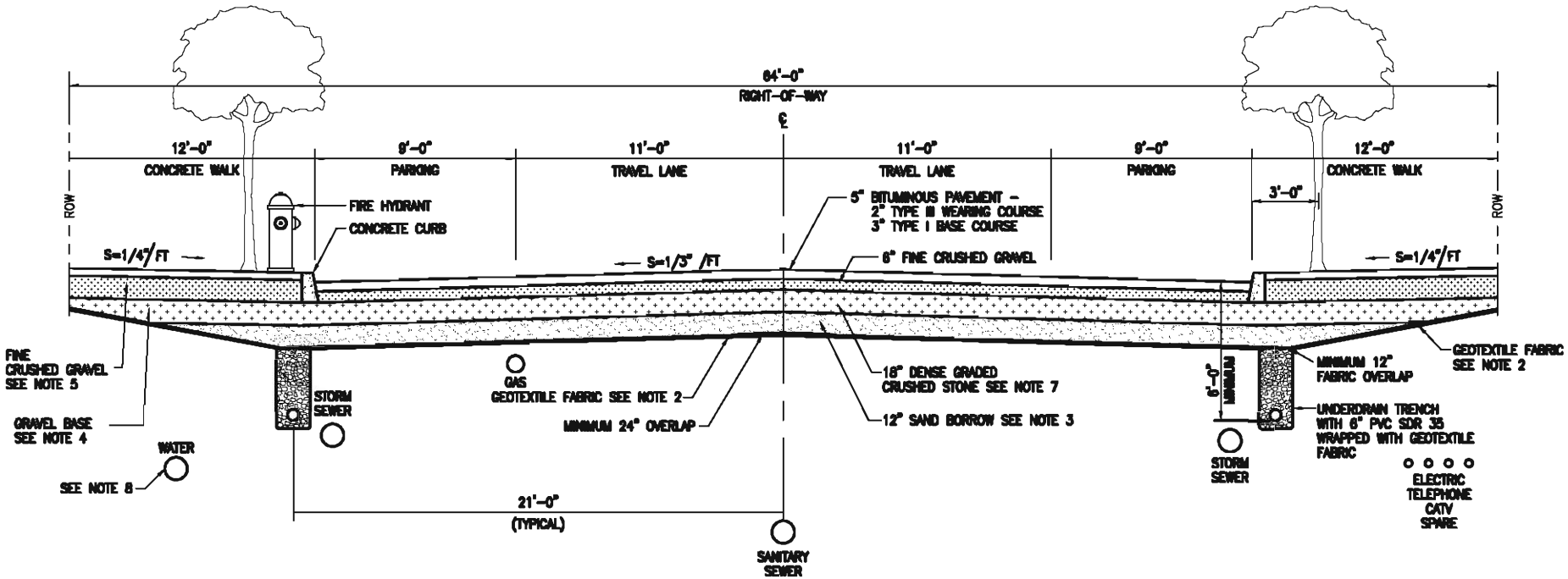

NOTES:

1. THE MATERIAL SUBBASE DEPTHS SHOWN ARE MINIMUM REQUIREMENTS. INVESTIGATION OF EXISTING SOIL CONDITIONS IS REQUIRED, AND DEPENDING ON EXISTING SOIL CONDITIONS, THE SUBBASE DEPTHS MAY CHANGE IF RECOMMENDED BY AN INDEPENDENT GEOTECHNICAL ENGINEER.
2. GEOTEXTILE FABRICS SHALL MEET THE REQUIREMENTS OF VAOT SECTION 720 FOR ROADBED SUBGRADE AND UNDERDRAIN TRENCHES.
3. SAND BORROW SHALL MEET THE REQUIREMENTS OF VAOT SUBSECTION 703.03.
4. GRAVEL BASE SHALL MEET THE REQUIREMENTS OF VAOT SUBSECTION 704.04.
5. FINE CRUSHED GRAVEL SHALL MEET THE REQUIREMENTS OF VAOT SUBSECTION 704.05.
6. CRUSHED WASHED STONE SHALL MEET THE REQUIREMENTS OF VAOT SUBSECTION 704.10.
7. DENSE GRADED CRUSHED STONE SHALL MEET THE REQUIREMENTS OF VAOT SUBSECTION 704.06.
8. IF BUILDING FACE IS LOCATED AT EDGE OF RIGHT-OF-WAY, WATERLINE LOCATION SHALL BE SWITCHED WITH GASLINE LOCATION.

TOWN OF WILLISTON PUBLIC WORKS DEPARTMENT	
SCALE: NTS	DATE: APRIL 2010
DRAWING #: E-7	DRAWN BY: FA&A
TYPICAL GRID STREET SECTION	

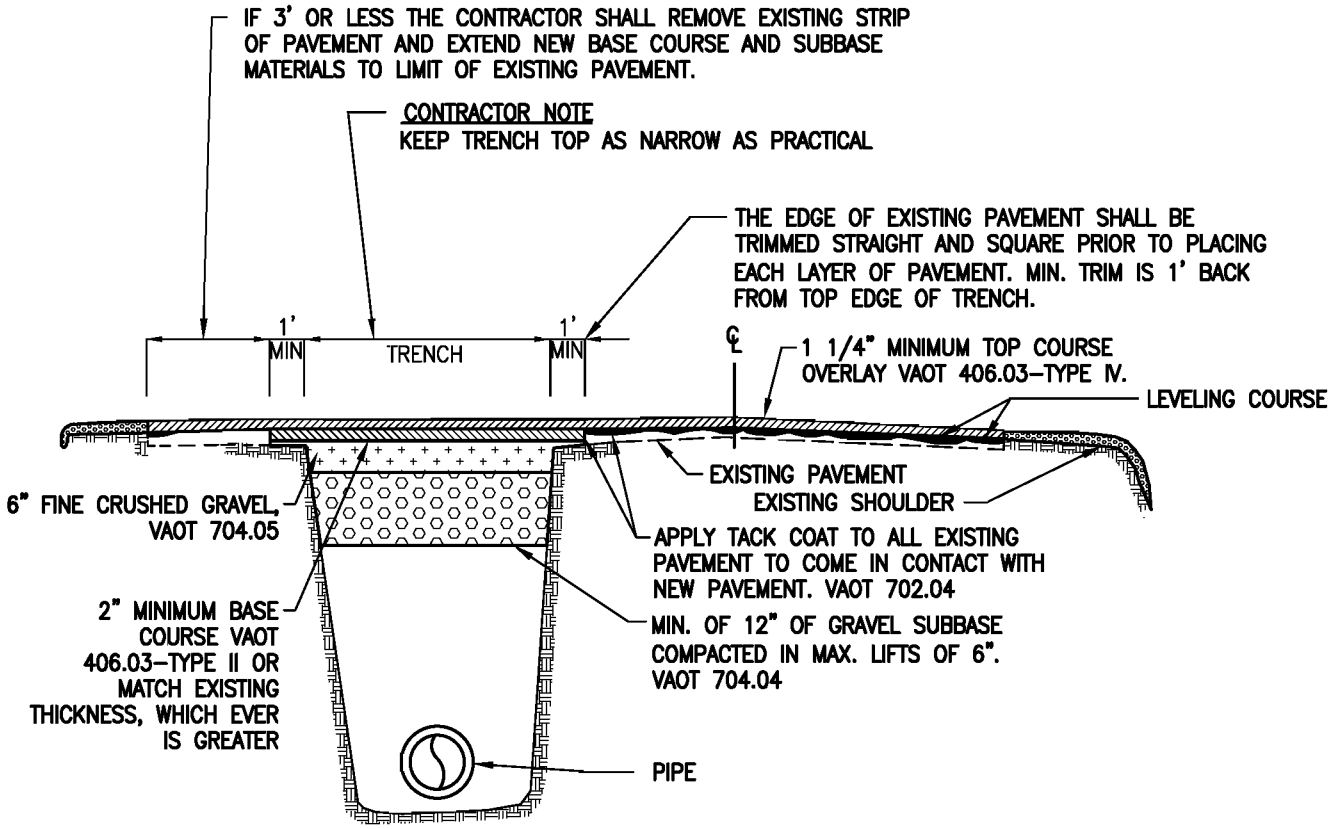

NOTES:

1. FULL WIDTH PAVEMENT SHALL BE SAME WIDTH AS PAVEMENT PRIOR TO CONSTRUCTION. CONTRACTOR SHALL BE RESPONSIBLE FOR DOCUMENTING EXISTING CONDITIONS PRIOR TO BEGINNING OF WORK ON THIS CONTRACT.
2. ALL PAVEMENT SHALL HAVE THE MINIMUM COMPACTED THICKNESS AS SHOWN.
3. ALL EXISTING PAVEMENT SHALL BE REPAINTED AS NECESSARY.

TOWN OF WILLISTON PUBLIC WORKS DEPARTMENT	
SCALE: NTS	DATE: APRIL 2010
DRAWING #: E–8	DRAWN BY: FA&A
FULL WIDTH PAVEMENT TRENCH REPAIR DETAIL	

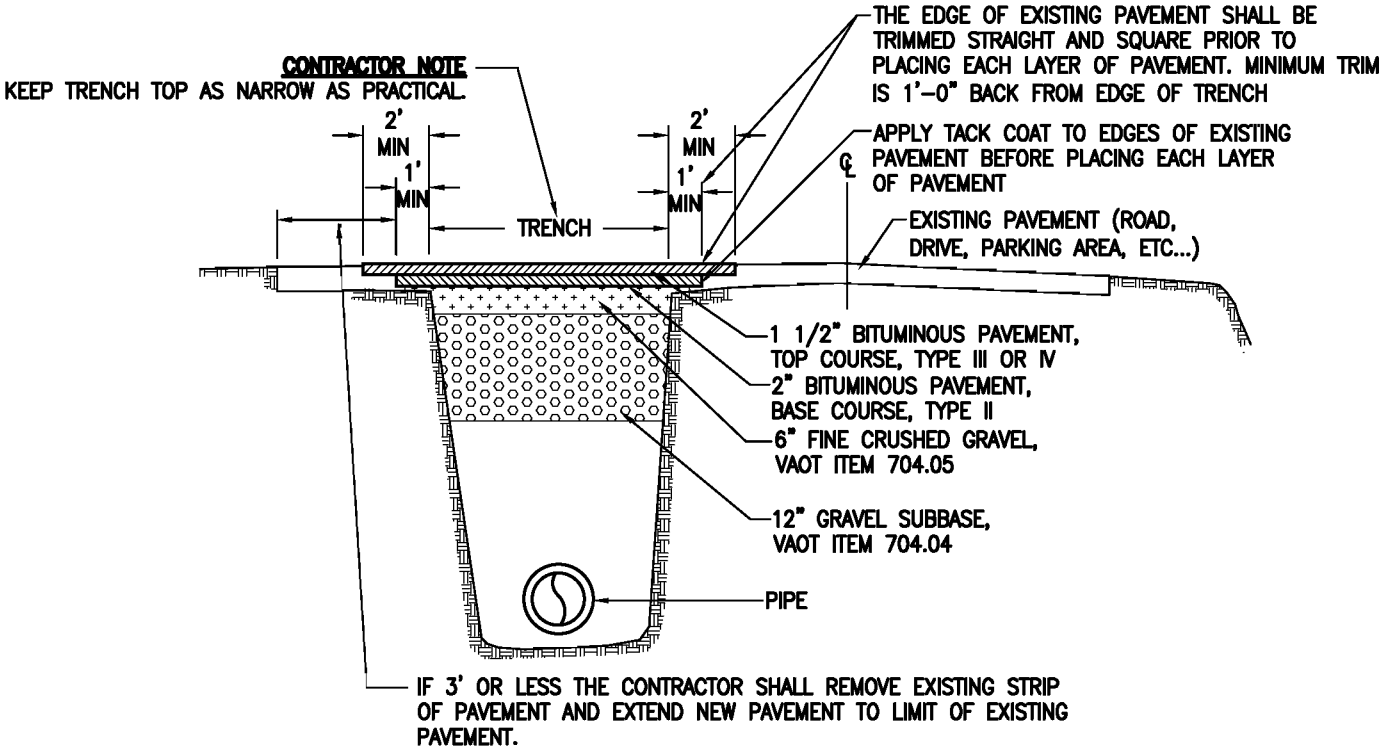

NOTES:

1. ALL PAVEMENT SHALL HAVE A MINIMUM COMPACTED THICKNESS AS SHOWN.
2. IF NECESSARY, SHOULDER SHALL BE REPLACED TO A CONDITION EQUAL OR BETTER THAN BEFORE CONSTRUCTION ACTIVITIES.
3. ALL EXISTING PAVEMENT MARKINGS SHALL BE RE-PAINTED AS NECESSARY.

TOWN OF WILLISTON PUBLIC WORKS DEPARTMENT	
SCALE: NTS	DATE: APRIL 2010
DRAWING #: E-9	DRAWN BY: FA&A
TRENCH PAVEMENT REPAIR DETAIL	

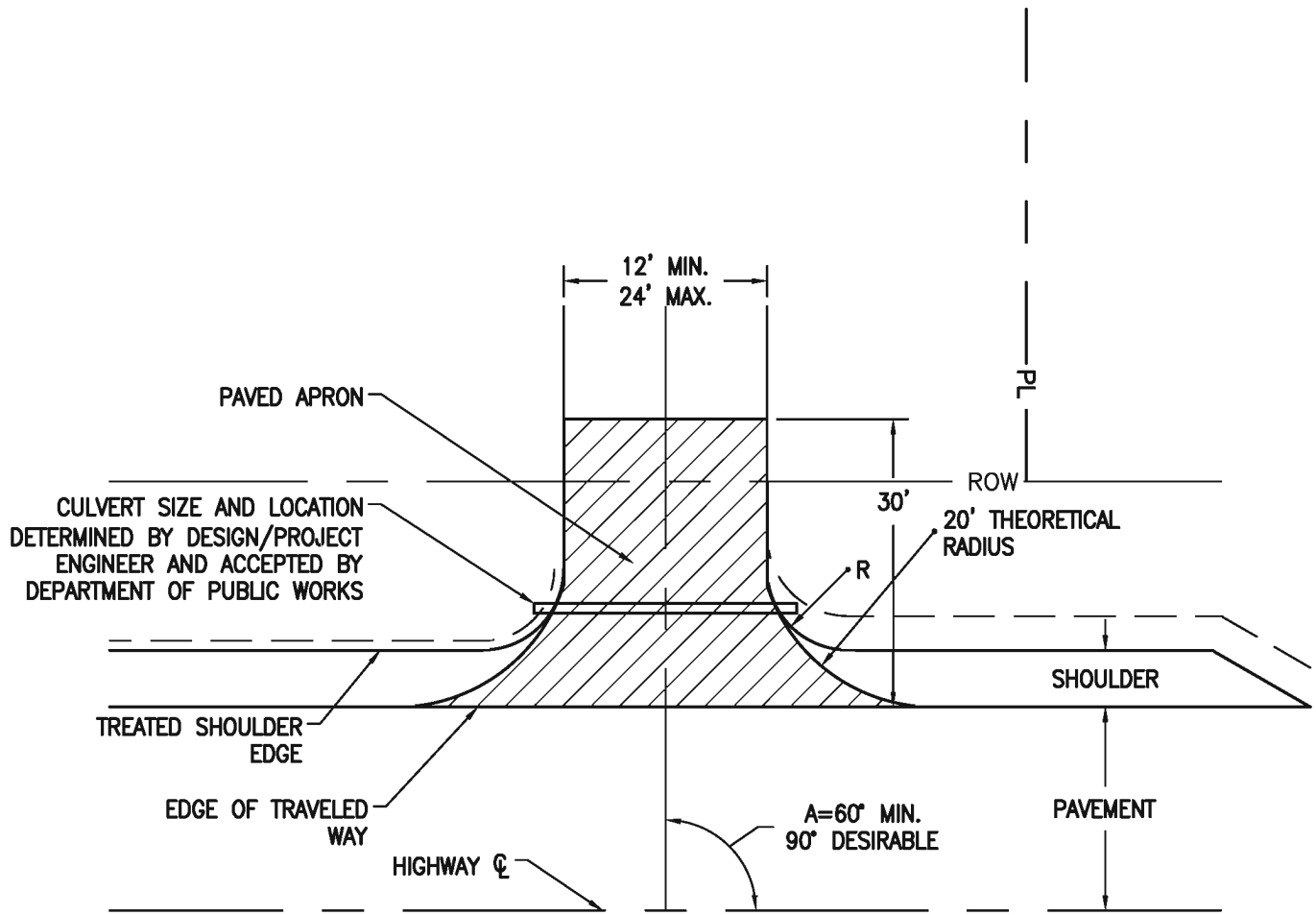

NOTES:

1. THE DRIVEWAY APRON SHALL BE PAVED FOR A LENGTH OF 30' FROM THE EDGE OF THE TRAVELED WAY.
2. MINIMUM RADIUS, R = THEORETICAL RADIUS MINUS SHOULDER WIDTH.

TOWN OF WILLISTON PUBLIC WORKS DEPARTMENT	
SCALE: NTS	DATE: APRIL 2010
DRAWING #: E-10	DRAWN BY: FA&A
TYPICAL RESIDENTIAL DRIVE	

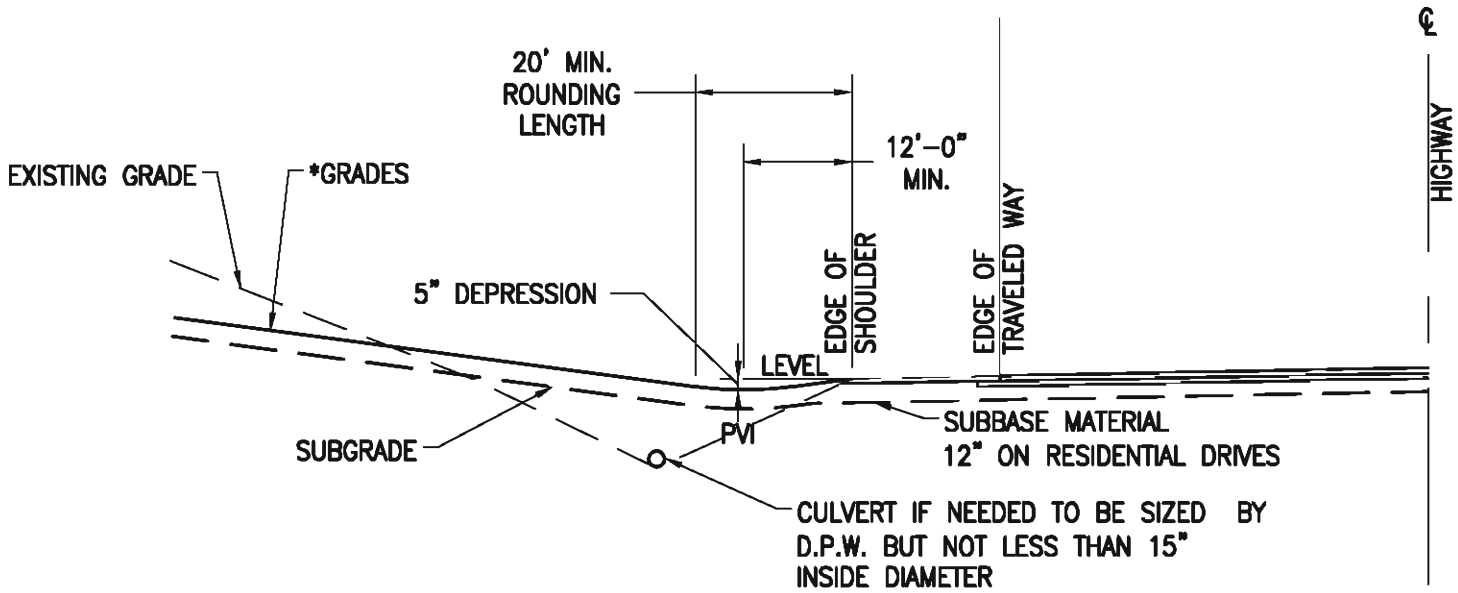

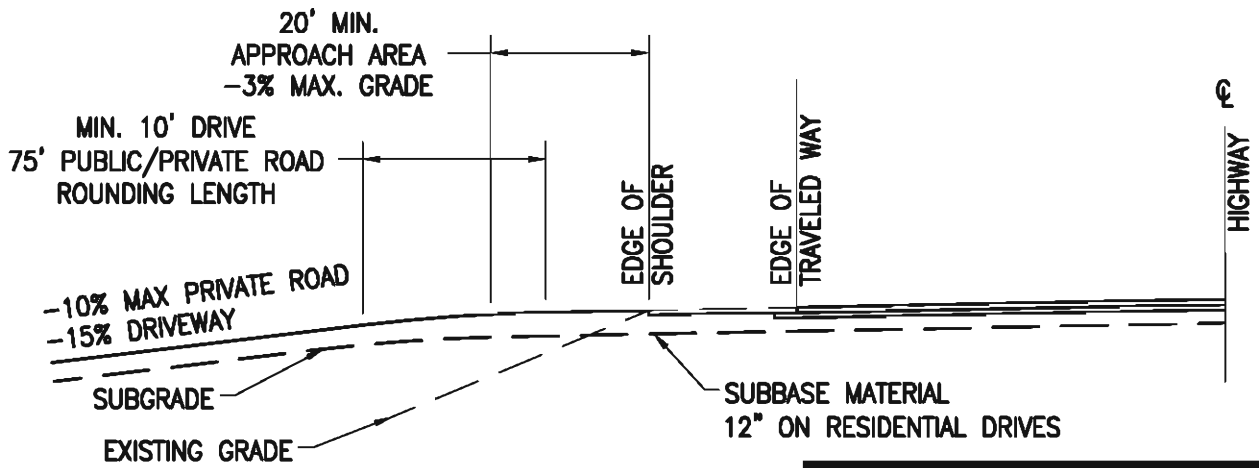

*GRADES

DRIVE GRADE 15% MAX

PRIVATE ROADS MAX. GRADE 3% FOR 100' FROM ℄ INTERSECTION AND 8% THEREAFTER

TOWN OF WILLISTON PUBLIC WORKS DEPARTMENT	
SCALE: NTS	DATE: APRIL 2010
DRAWING #: E-11	DRAWN BY: FA&A
TYPICAL RESIDENTIAL DRIVEWAY PROFILE	

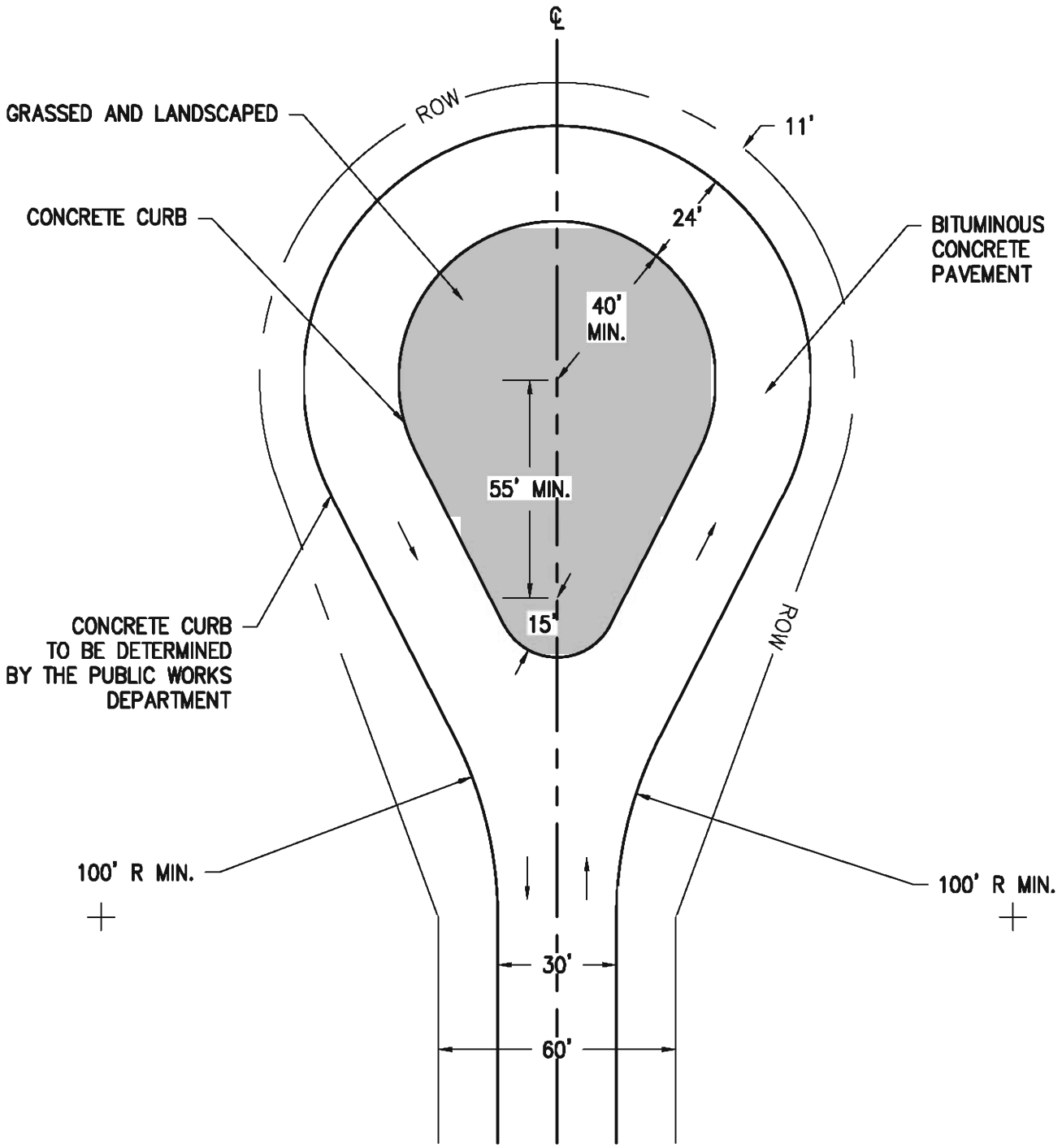

TOWN OF WILLISTON PUBLIC WORKS DEPARTMENT	
SCALE: **NTS**	DATE: **APRIL 2010**
DRAWING #: **E-12**	DRAWN BY: **FA&A**
TYPICAL CUL-DE-SAC DETAIL FOR DEAD-END ROADS	

SUGGESTED MAILBOX INSTALLATION WHERE
SNOW REMOVAL IS A PROBLEM

INSTALLATION WITH CURB

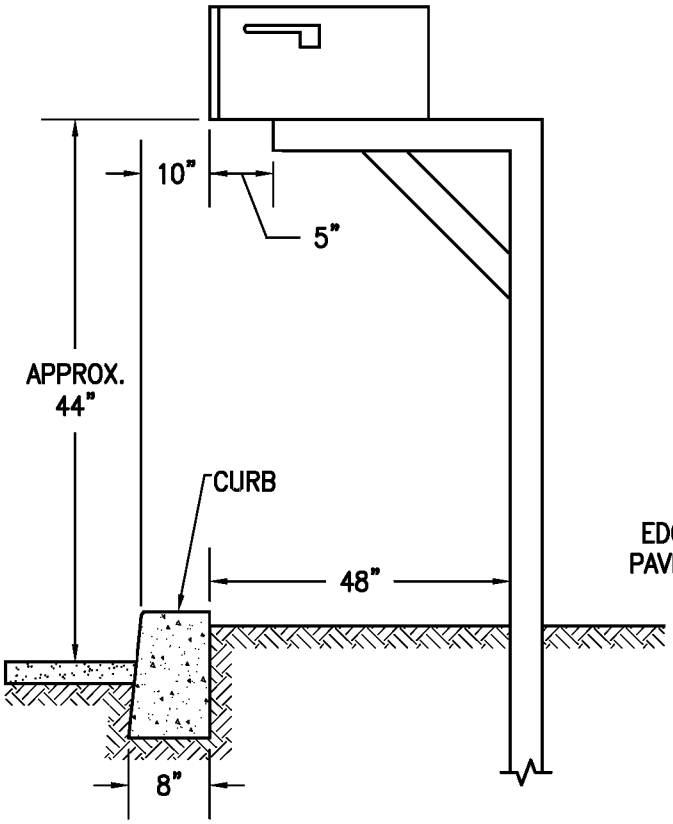

INSTALLATION WITHOUT CURB

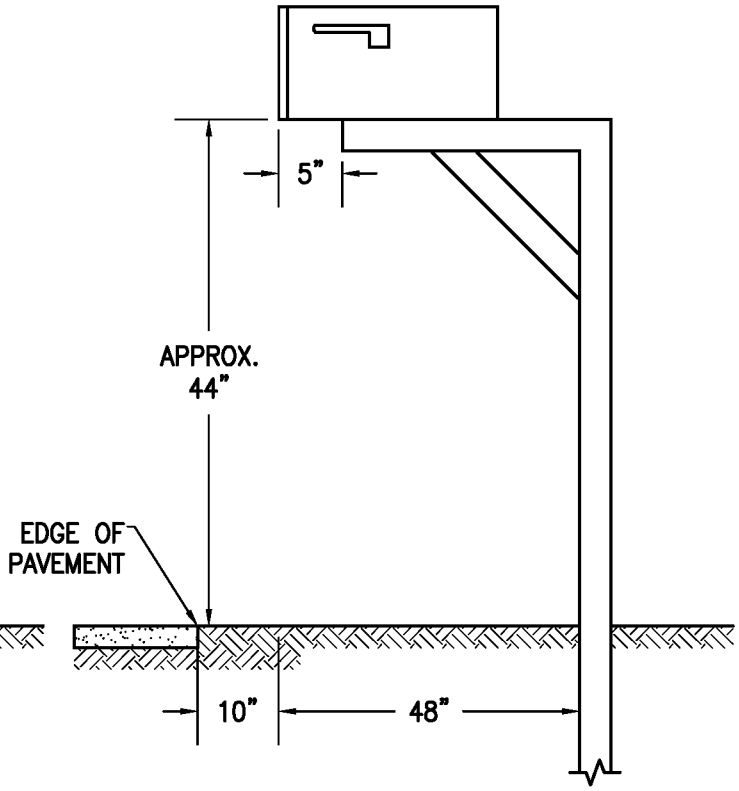

NOTES:

1. POST MUST BE NEAT AND OF ADEQUATE STRENGTH AND SIZE.
2. BOXES MUST BE PLACED TO CONFORM WITH STATE LAWS AND HIGHWAY REGULATIONS.

TOWN OF WILLISTON PUBLIC WORKS DEPARTMENT	
SCALE: NTS	DATE: APRIL 2010
DRAWING #: E-13	DRAWN BY: FA&A
TYPICAL MAILBOX DETAIL	

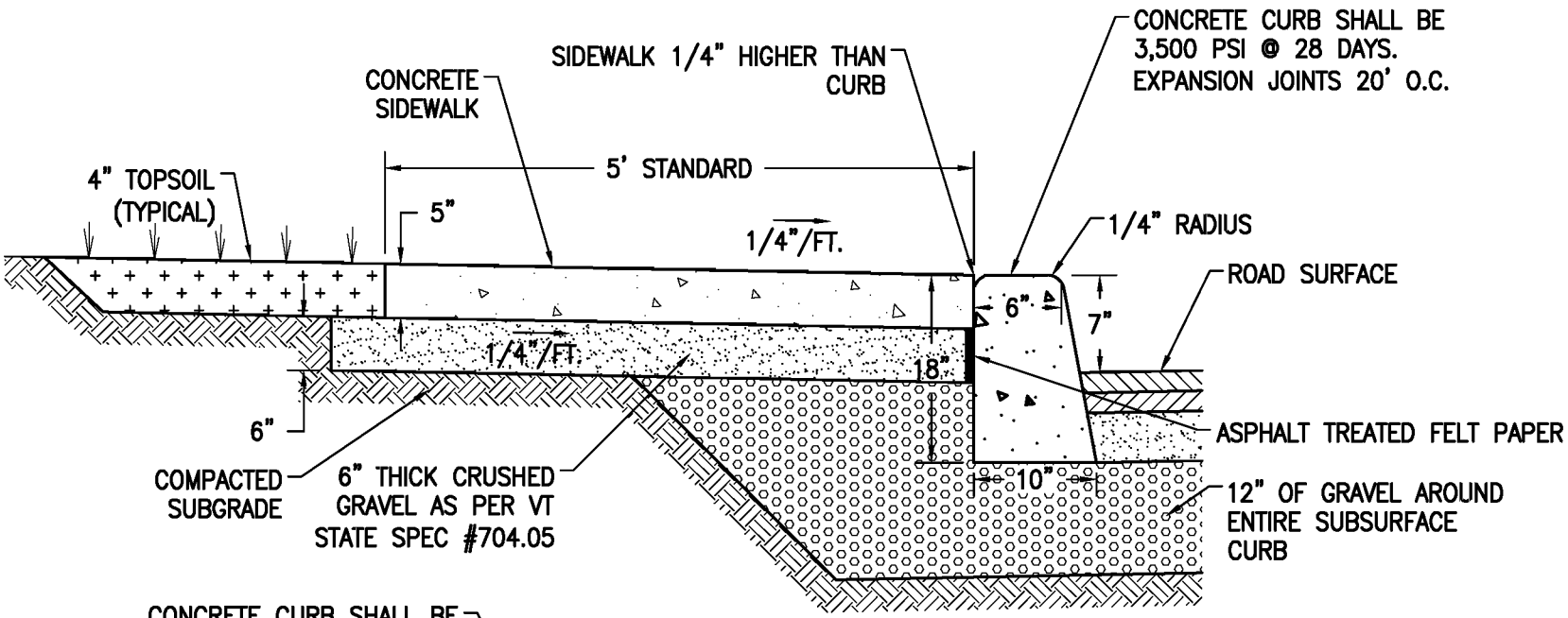

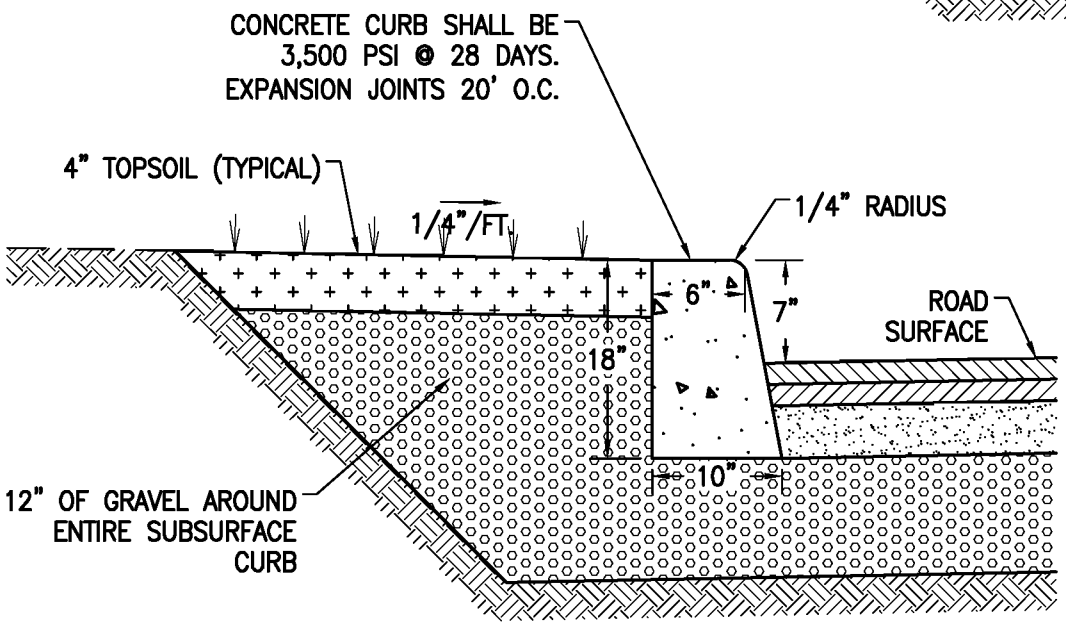

TOWN OF WILLISTON PUBLIC WORKS DEPARTMENT	
SCALE: NTS	DATE: APRIL 2010
DRAWING #: E-14	DRAWN BY: FA&A
TYPICAL CONCRETE CURB/SIDEWALK	

APPENDIX F

EROSION CONTROL DETAILS

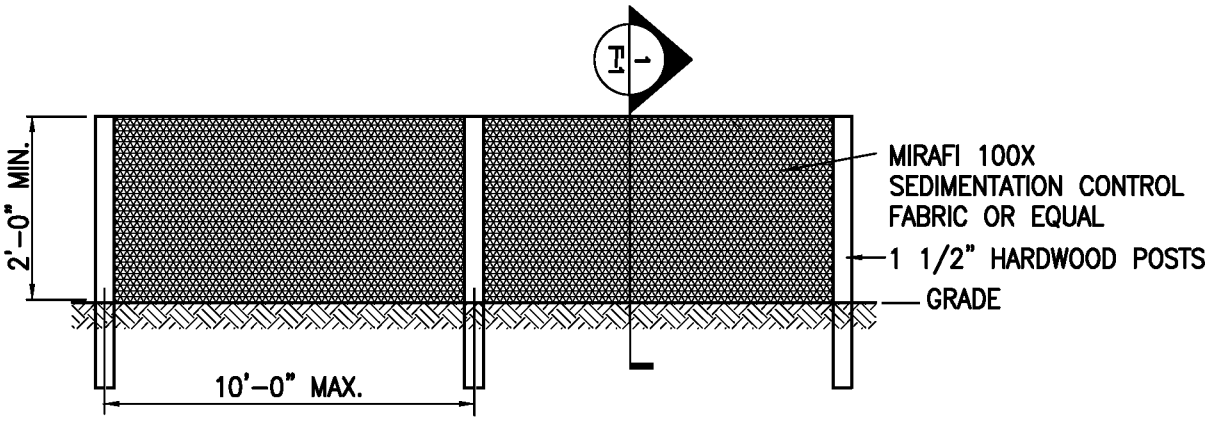

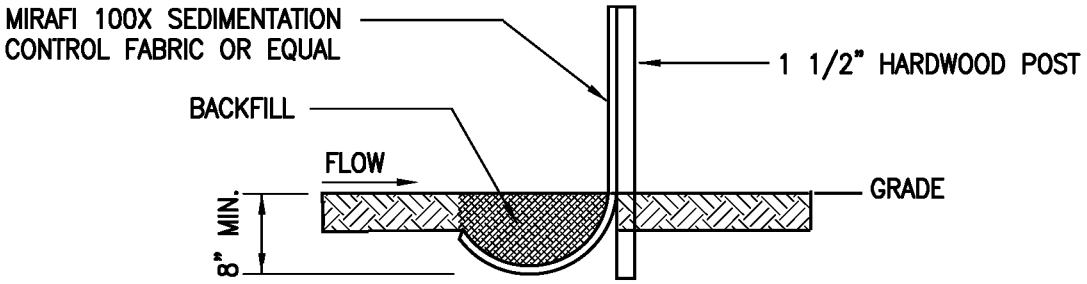

1 / F-1 **SECTION**
SCALE: NOT TO SCALE

SILT FENCE NOTES:

1. SILT FENCE SHALL BE PRE-FABRICATED EROSION CONTROL FENCE BY MIRAFI OR APPROVED EQUAL.
2. INSTALL WHERE SHOWN ON PLANS. THE FENCE SHALL BE INSTALLED PARALLEL TO CONTOURS WHERE POSSIBLE. THE ENDS OF THE FENCE SHOULD BE CURVED UPHILL TO PREVENT FLOW AROUND THE ENDS.
3. SECTIONS OF THE SILT FENCE SHALL BE JOINED TO OVERLAP BY FOLDING FABRIC AROUND EACH POST ONE FULL TURN. DRIVE POSTS TIGHTLY TOGETHER AND SECURE TOPS OF POSTS BY TYING OFF WITH CORD OR WIRE TO PREVENT FLOW-THROUGH OR BUILT-UP SEDIMENT AT JOINT.
4. INSPECT ALL SILT FENCE AT LEAST ONCE A WEEK AND WITHIN 24 HOURS AFTER EACH RAINFALL. MAINTENANCE SHALL BE PERFORMED AS NEEDED, AND SEDIMENT REMOVED WHEN SEDIMENT REACHES 1/3 HEIGHT OF SILT FENCE.
5. UPON FINAL STABILIZATION OF THE AREA UPHILL OF THE FABRIC, THE FABRIC SHALL BE REMOVED WITH THE APPROVAL OF THE ENGINEER.

TOWN OF WILLISTON **PUBLIC WORKS DEPARTMENT**	
SCALE: **NTS**	DATE: **APRIL 2010**
DRAWING #: **F-1**	DRAWN BY: **FA&A**
TEMPORARY SILT FENCE DETAIL	

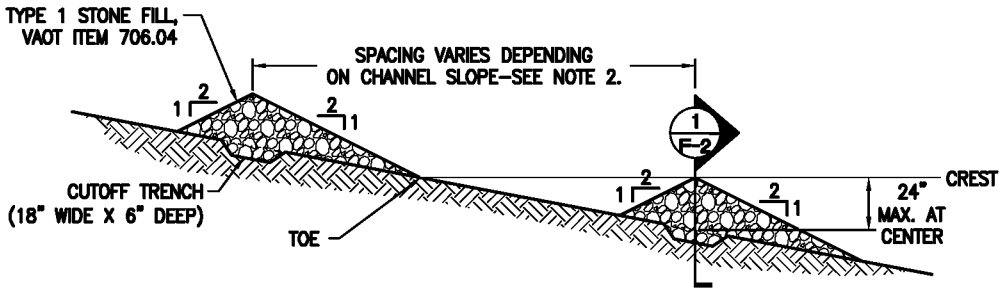

PROFILE

SCALE: NOT TO SCALE

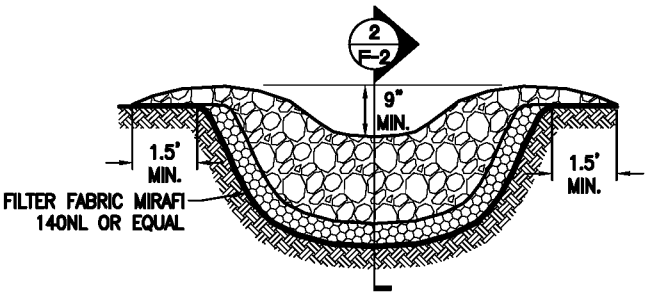

1 F-2 SECTION

SCALE: NOT TO SCALE

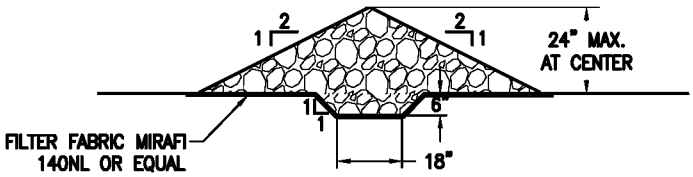

2 F-2 SECTION

SCALE: NOT TO SCALE

STONE CHECK DAM NOTES:

1. STONE WILL BE PLACED ON A FILTER FABRIC FOUNDATION AT ALL LOCATIONS SHOWN ON THE PLANS.
2. SET SPACING OF THE CHECK DAMS TO ASSURE THAT THE ELEVATION OF THE CREST OF THE DOWNSTREAM DAM IS AT THE SAME ELEVATION AS THE TOE OF THE UPSTREAM DAM.
3. EXTEND THE STONE A MINIMUM OF 1.5 FEET BEYOND THE DITCH BANKS TO PREVENT THE FLOW OF WATER AROUND THE DAM.
4. PROTECT THE CHANNEL DOWNSTREAM OF THE LOWEST CHECK DAM FROM SCOUR AND EROSION WITH STONE OR LINER AS APPROPRIATE.
5. ENSURE THAT THE CHANNEL APPURTENANCES SUCH AS CULVERT ENTRANCES BELOW CHECK DAMS ARE NOT SUBJECT TO DAMAGE OR BLOCKAGE FROM DISPLACED STONES.
6. INSPECT ALL CHECK DAMS AT LEAST ONCE A WEEK AND WITHIN 24 HOURS AFTER EACH RAINFALL. MAINTENANCE SHALL BE PERFORMED AS NEEDED, AND SEDIMENT REMOVED WHEN SEDIMENT REACHES 1/3 HEIGHT OF CHECK DAM.
7. UPON STABILIZATION OF THE AREA UPSTREAM OF THE STONE CHECK DAM, THE CHECK DAM SHALL BE REMOVED WITH THE APPROVAL OF THE ENGINEER. THE AREA UNDER THE STONE CHECK DAM SHALL BE SEEDED AND MULCHED UPON REMOVAL.

TOWN OF WILLISTON PUBLIC WORKS DEPARTMENT	
SCALE: NTS	DATE: APRIL 2010
DRAWING #: F-2	DRAWN BY: FA&A
TEMPORARY STONE CHECK DAM DETAIL	

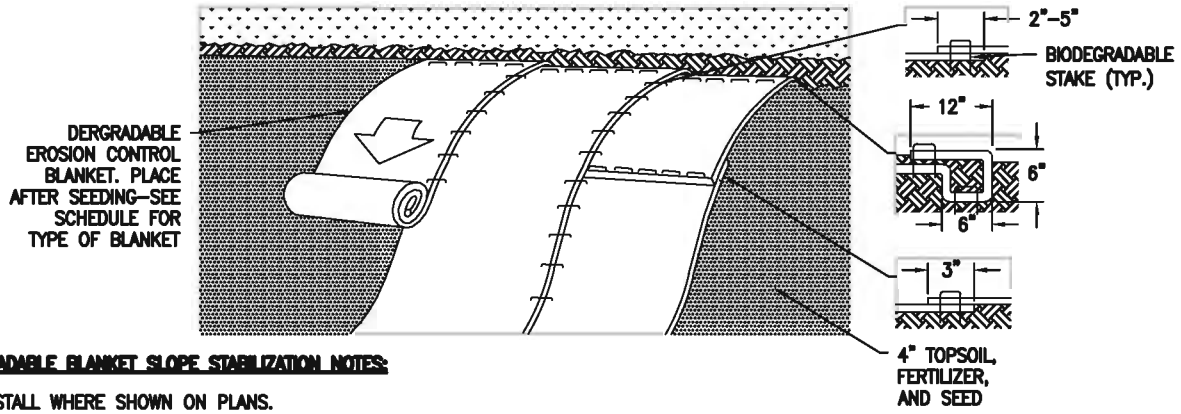

DEGRADABLE BLANKET SLOPE STABILIZATION NOTES:

1. INSTALL WHERE SHOWN ON PLANS.
2. CONTRACTOR SHALL USE BIODEGRADABLE STAKES FOR FASTENERS. WIRE STAPLES ARE NOT ACCEPTABLE.
3. PREPARE SOIL BEFORE INSTALLING BLANKETS, INCLUDING ANY NECESSARY APPLICATION OF LIME, FERTILIZER, AND SEED.
4. BEGIN AT THE TOP OF THE SLOPE BY ANCHORING THE BLANKET IN A 6" DEEP X 6" WIDE TRENCH WITH APPROXIMATELY 12" OF BLANKET EXTENDED BEYOND THE UP–SLOPE PORTION OF THE TRENCH. ANCHOR THE BLANKET WITH A ROW OF BIODEGRADABLE STAKES APPROXIMATELY 12" APART IN THE BOTTOM OF THE TRENCH. BACKFILL AND COMPACT THE TRENCH AFTER STAKING. APPLY SEED TO COMPACTED SOIL AND FOLD REMAINING 12" PORTION OF BLANKET BACK OVER SEED AND COMPACTED SOIL. SECURE BLANKET OVER COMPACTED SOIL WITH A ROW OF BIODEGRADABLE STAKES SPACED APPROXIMATELY 12" APART ACROSS THE WIDTH OF THE BLANKET.
5. BLANKETS WILL UNROLL WITH APPROPRIATE SIDE AGAINST THE SOIL SURFACE. ALL BLANKETS MUST BE SECURELY FASTENED TO SOIL SURFACE BY PLACING BIODEGRADABLE STAKES IN APPROPRIATE LOCATIONS AS SHOWN IN THE STAPLE PATTERN GUIDE. WHEN USING OPTIONAL DOT SYSTEM, BIODEGRADABLE STAKES SHOULD BE PLACED THROUGH EACH OF THE COLORED DOTS CORRESPONDING TO THE APPROPRIATE STAPLE PATTERN.
6. THE EDGES OF PARALLEL BLANKETS MUST BE STAPLED WITH APPROXIMATELY 2"–5" OVERLAP DEPENDING ON BLANKET TYPE. TO ENSURE PROPER SEAM ALIGNMENT, PLACE THE EDGE OF THE OVERLAPPING BLANKET (BLANKET BEING INSTALLED ON TOP) EVEN WITH THE COLORED SEAM STITCH ON THE PREVIOUSLY INSTALLED BLANKET.
7. CONSECUTIVE BLANKETS SPLICED DOWN THE SLOPE MUST BE PLACED END OVER END (SHINGLE STYLE) WITH AN APPROXIMATE 3" OVERLAP. STAPLE THROUGH OVERLAPPED AREA, APPROXIMATELY 12" APART ACROSS ENTIRE BLANKET WIDTH.
8. IN LOOSE SOIL CONDITIONS, THE USE OF STAKE LENGTHS GREATER THAN 6" MAY BE NECESSARY TO PROPERLY SECURE THE BLANKETS.

DEGRADABLE EROSION CONTROL BLANKET SCHEDULE

TYPE	SLOPE (X)	BLANKET DESCRIPTION	MODEL NO.
A	4:1–3:1	SINGLE NET STRAW BLANKET	NORTH AMERICAN GREEN S75 OR EQUAL
B	3:1–2:1	DOUBLE NET STRAW BLANKET	NORTH AMERICAN GREEN S150 OR EQUAL
C	2:1–1:1	DOUBLE NET BLANKET 70% STRAW/30% COCONUT	NORTH AMERICAN GREEN SC150 OR EQUAL
D	1:1 OR GREATER	DOUBLE NET COCONUT BLANKET	NORTH AMERICAN GREEN C125 OR EQUAL

TOWN OF WILLISTON PUBLIC WORKS DEPARTMENT	
SCALE: NTS	DATE: APRIL 2010
DRAWING #: F–3	DRAWN BY: FA&A
EROSION CONTROL BLANKET DETAIL	

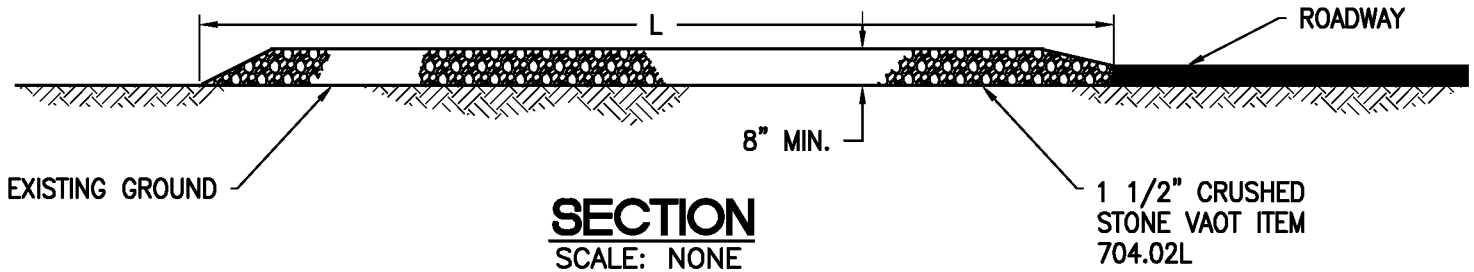

SECTION
SCALE: NONE

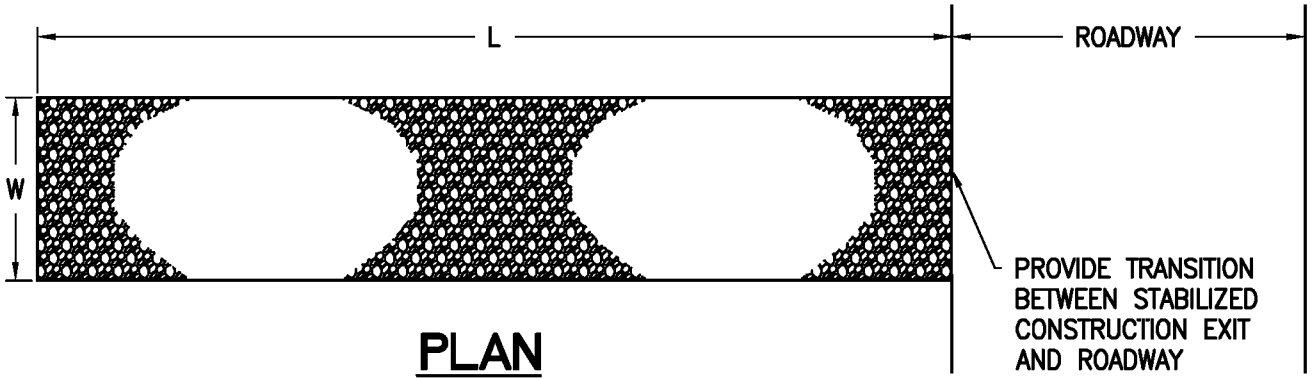

PLAN
SCALE: NONE

STABILIZED CONSTRUCTION ENTRANCE NOTES:

1. LENGTH (L) SHALL BE 40' MINIMUM WHERE SUFFICIENT SPACE IS AVAILABLE.

2. WIDTH (W) SHALL NOT BE LESS THAN 24'.

3. WHEN NECESSARY, WHEELS SHALL BE CLEANED TO REMOVE SEDIMENT PRIOR TO ENTRANCE ONTO ROADWAY. WHEN WASHING IS REQUIRED, IT SHALL BE DONE ON AN AREA STABILIZED WITH CRUSHED STONE, WHICH DRAINS INTO APPROVED SEDIMENT TRAP OR SEDIMENT BASIN. ALL SEDIMENT SHALL BE PREVENTED FROM ENTERING ANY STORM DRAIN, DITCH, OR WATERCOURSE THROUGH USE OF METHODS AS APPROVED BY THE ENGINEER.

4. THE ENTRANCE SHALL BE MAINTAINED IN A CONDITION WHICH WILL PREVENT TRACKING OR FLOWING OF SEDIMENT ONTO ROADWAY. THIS MAY REQUIRE PERIODIC TOP DRESSING WITH ADDITIONAL STONE AS CONDITIONS DEMAND AND REPAIR AND OR CLEANOUT OF ANY MEASURES USED TO TRAP SEDIMENT. ALL SEDIMENT SPILLED, DROPPED, OR WASHED ONTO PUBLIC ROADWAY MUST BE REMOVED IMMEDIATELY.

TOWN OF WILLISTON PUBLIC WORKS DEPARTMENT	
SCALE: NTS	DATE: APRIL 2010
DRAWING #: F-4	DRAWN BY: FA&A
STABILIZED CONSTRUCTION ENTRANCE DETAIL	

APPENDIX G

TREE PROTECTION DETAILS

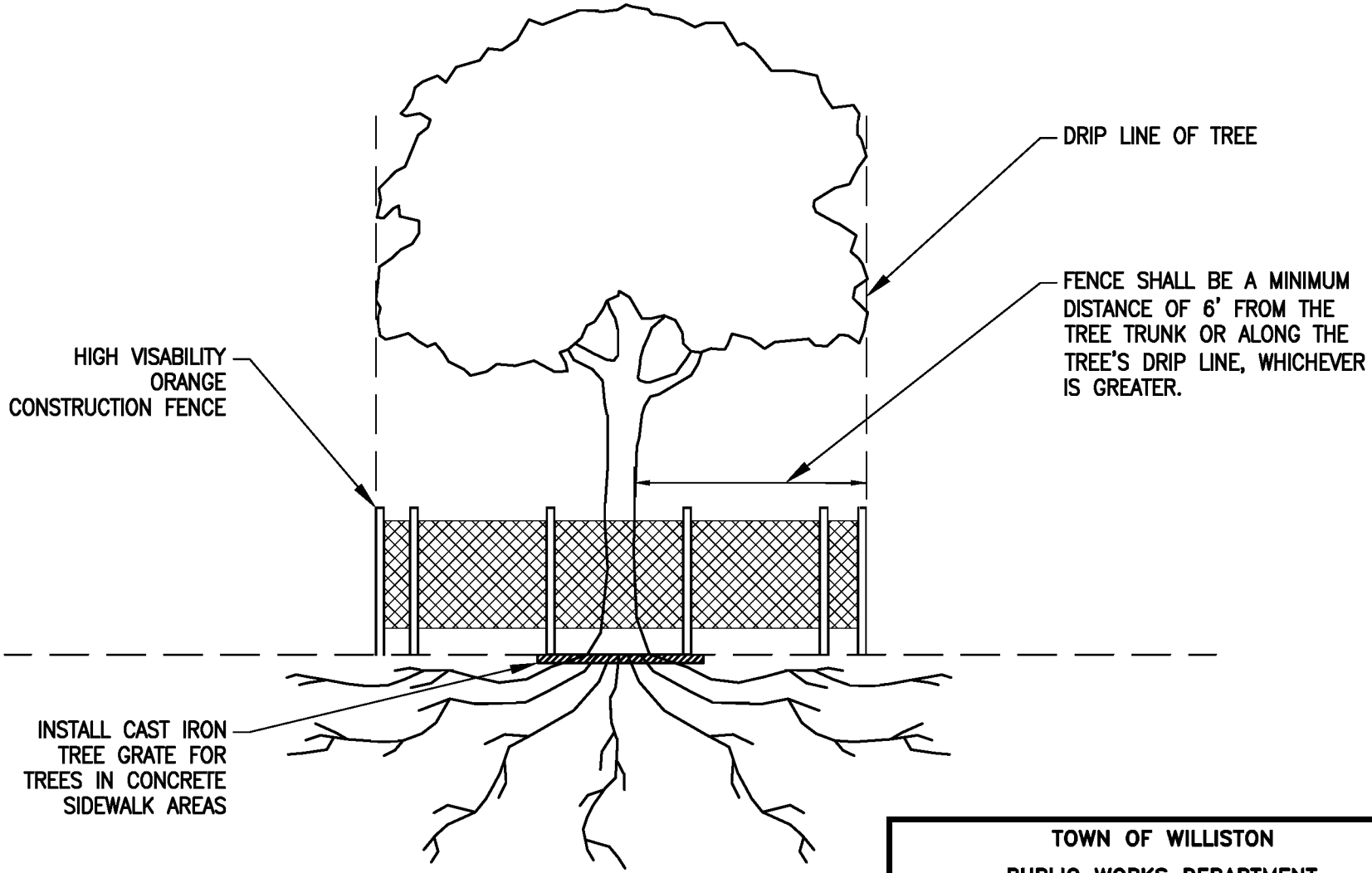

NOTES:

1. DURING CONSTRUCTION, WATER SHALL BE PROVIDED TO IMPACTED TREES AT A MINIMUM OF 1 INCH OF WATER PER WEEK OVER THE TREES ENTIRE DRIP LINE AREA OR AS DIRECTED BY THE ENGINEER.

2. TREE ROOT FERTILIZER SHALL BE APPLIED AT FREQUENCIES AS DIRECT BY A QUALIFIED FORESTER.

TOWN OF WILLISTON PUBLIC WORKS DEPARTMENT	
SCALE: NTS	DATE: APRIL 2010
DRAWING #: G–1	DRAWN BY: FA&A
TREE PROTECTION DETAIL	

APPENDIX H

PATHWAY DETAILS

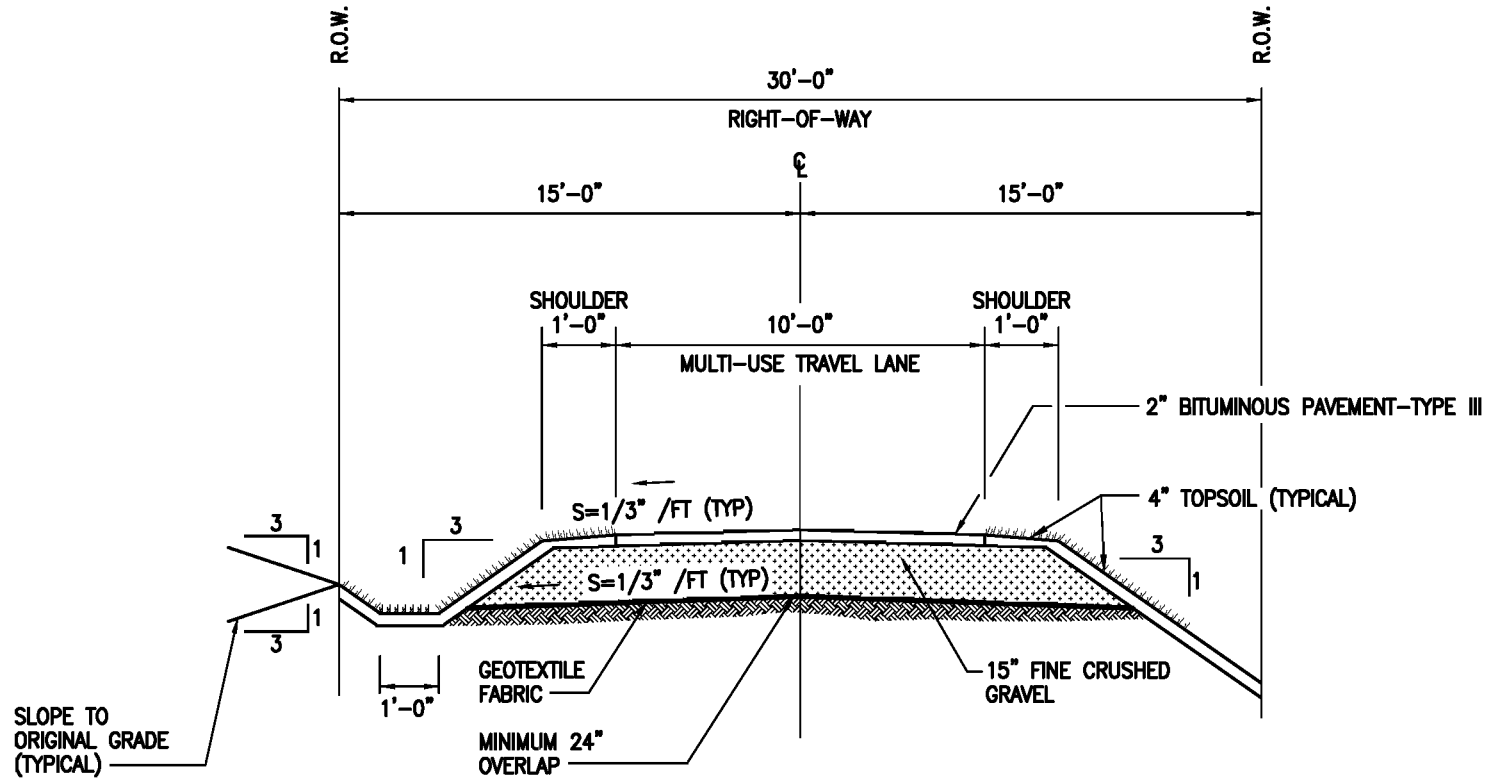

NOTES:

1. THE MATERIAL SUBBASE DEPTHS SHOWN ARE MINIMUM REQUIREMENTS. INVESTIGATION OF EXISTING SOIL CONDITIONS IS REQUIRED, AND DEPENDING ON EXISTING SOIL CONDITIONS, THE SUBBASE DEPTHS MAY CHANGE IF RECOMMENDED BY AN INDEPENDENT GEOTECHNICAL ENGINEER.
2. GEOTEXTILE FABRICS SHALL MEET THE REQUIREMENTS OF VAOT SECTION 720 FOR ROADBED SUBGRADE AND UNDERDRAIN TRENCHES.
3. SAND BORROW SHALL MEET THE REQUIREMENTS OF VAOT SUBSECTION 703.03.
4. FINE CRUSHED GRAVEL SHALL MEET THE REQUIREMENTS OF VAOT SUBSECTION 704.05.
5. CRUSHED WASHED STONE SHALL MEET THE REQUIREMENTS OF VAOT SUBSECTION 704.10.

TOWN OF WILLISTON PUBLIC WORKS DEPARTMENT	
SCALE: NTS	DATE: MARCH 2013
DRAWING #: H-1	DRAWN BY: A+E
TYPICAL RECREATION PATH SECTION	